# IMS VoIP

## SA3 LI #43

Nokia Siemens Networks


© Nokia Siemens Networks 2011

# IRI availability

- IRI always available in the signaling node
→ CSCF to generate IRI events

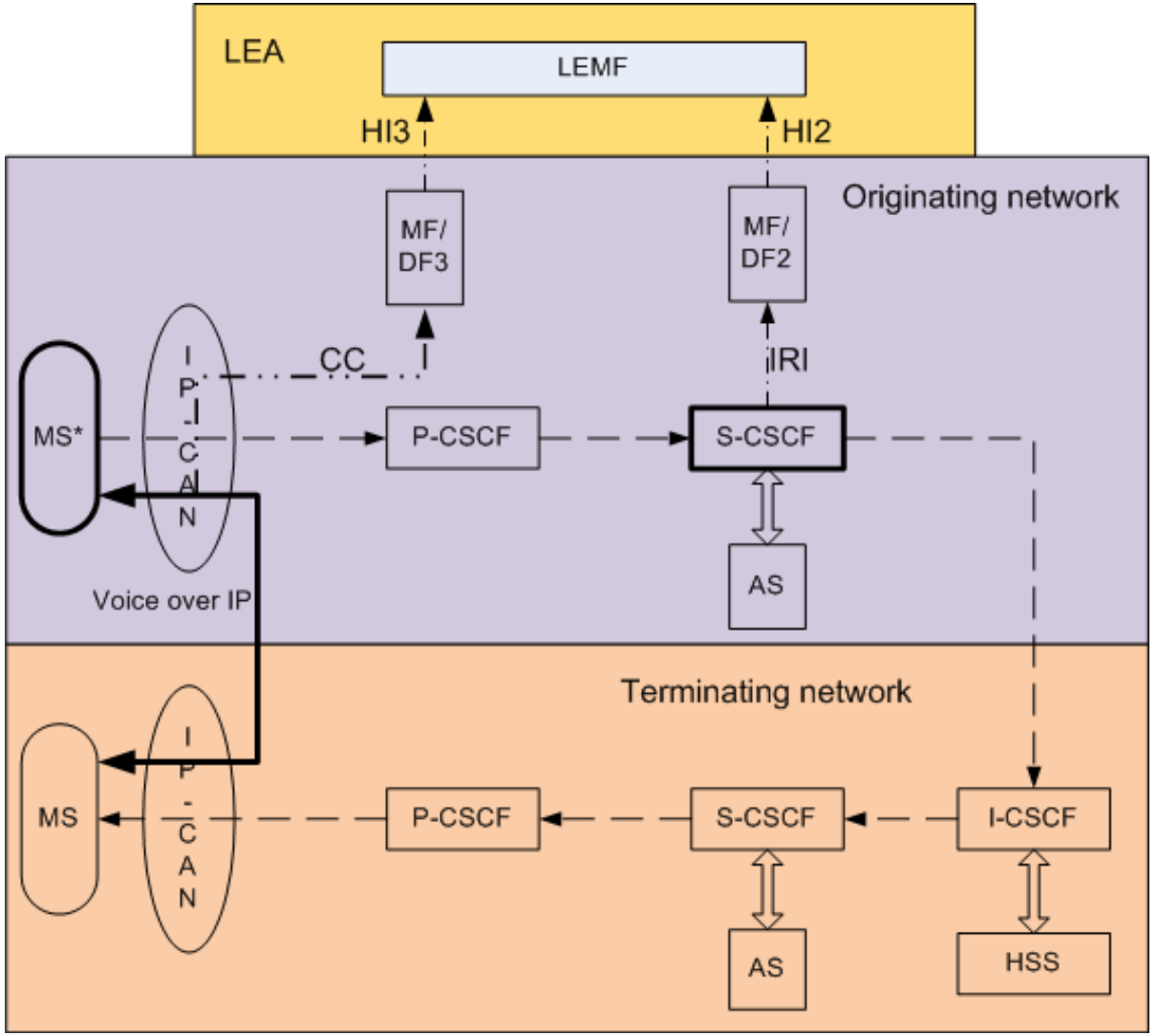



© Nokia Siemens Networks 2011

# CC availability

- CC can be available at different points depending on the actual scenario
- Simple forwarding scenario
  → CC not available in the IP-CAN

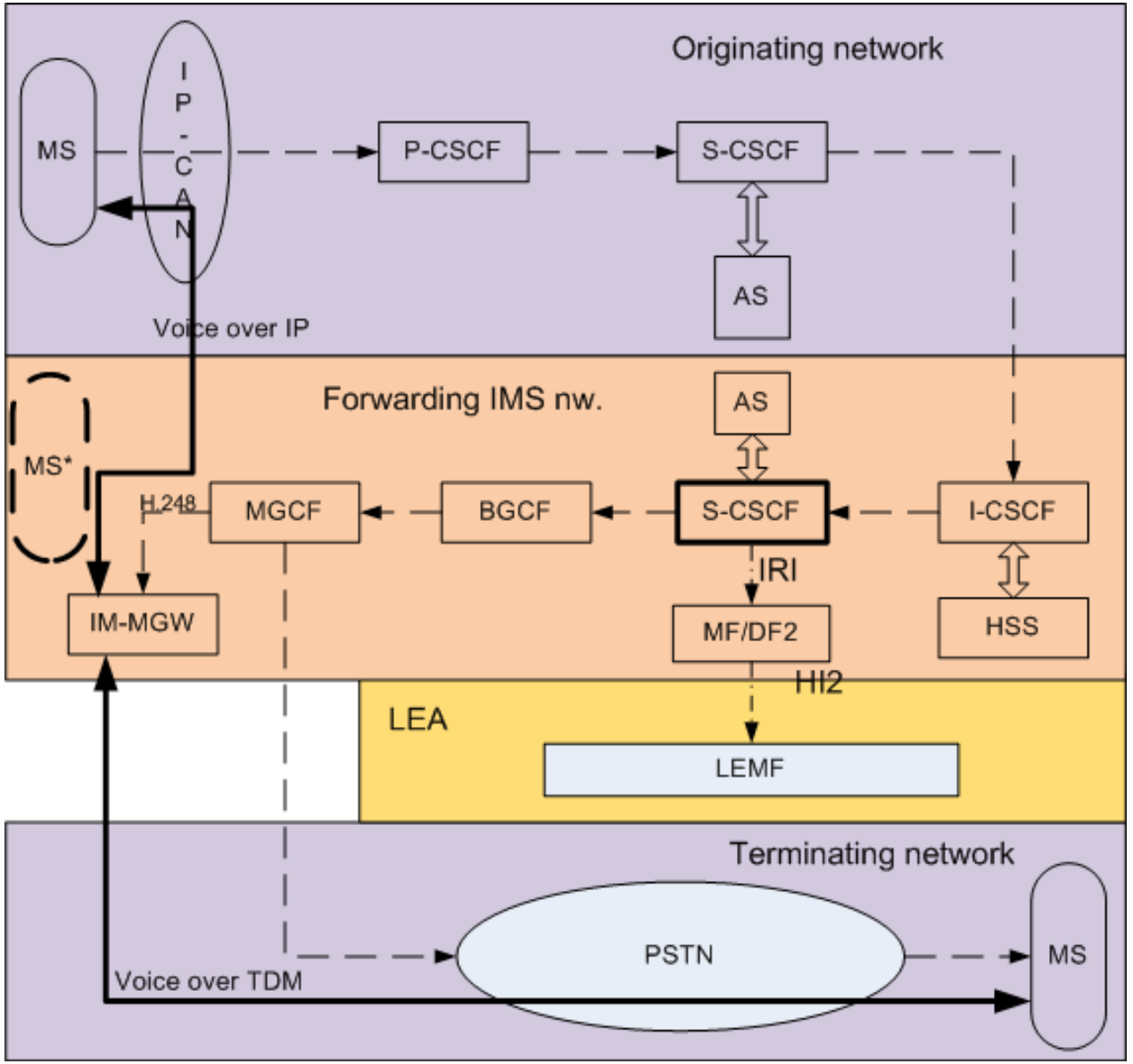



© Nokia Siemens Networks 2011

# Supplementary services

-Supplementary services TAS involved

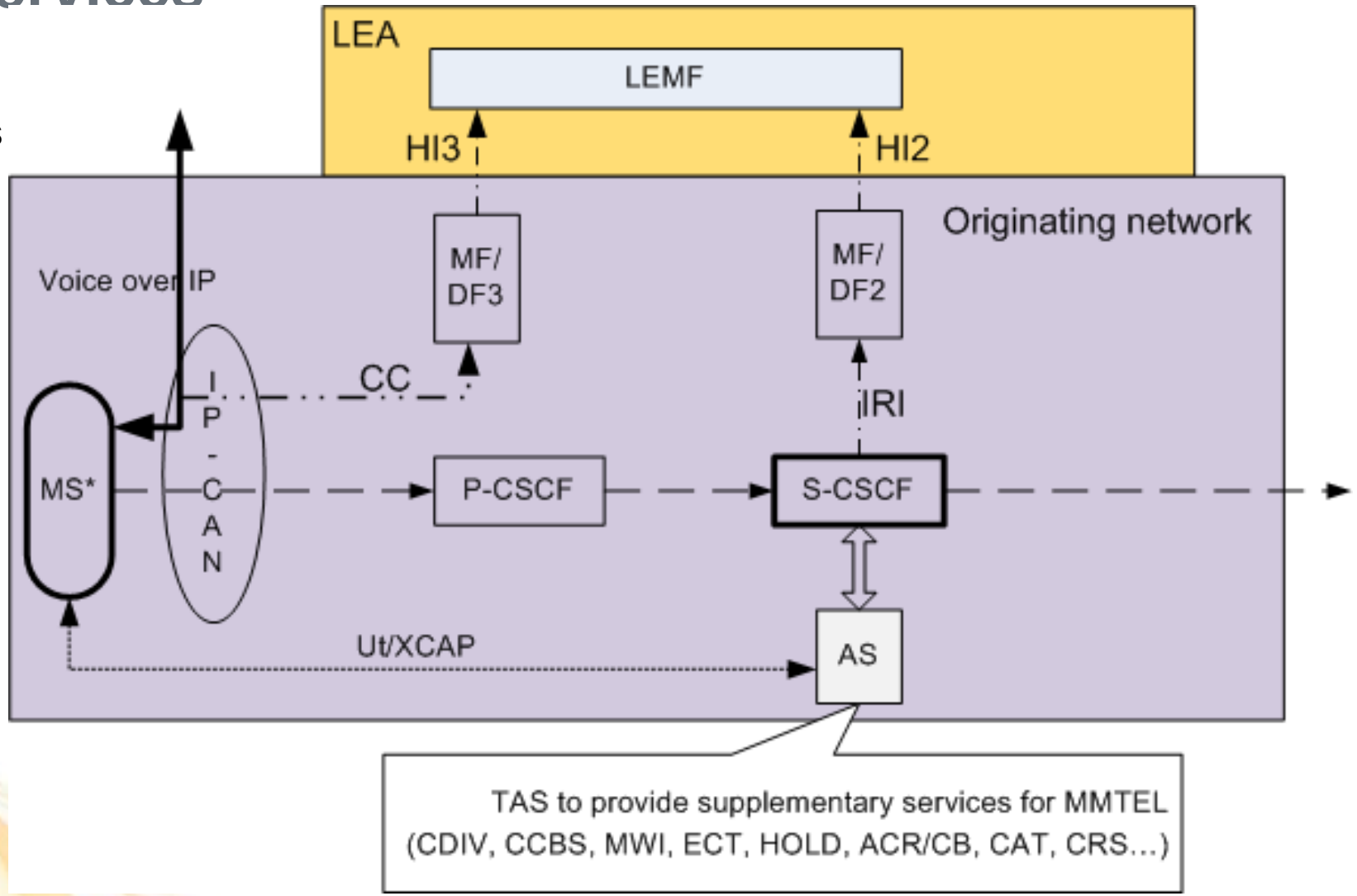



© Nokia Siemens Networks 2011

# Service continuity

- eSRVCC
- SRVCC Emergency call: no user plane anchoring
- Reverse SR-VCC study in Rel11

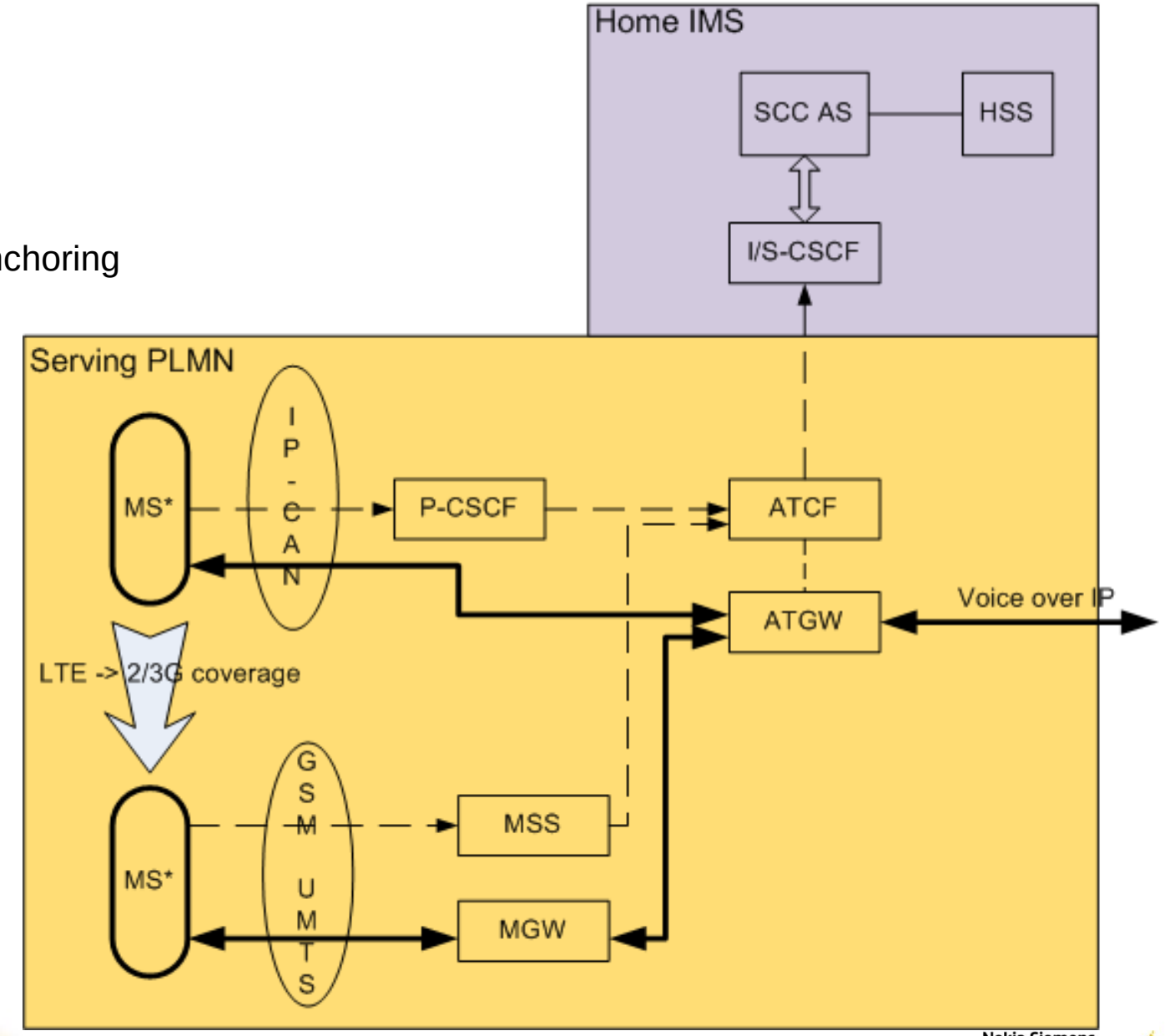



© Nokia Siemens Networks 2011

# Optimal media routing

- Optimal media routing – media may not available in home network
  - Corporate network
  - Common serving network
  - Common transit network

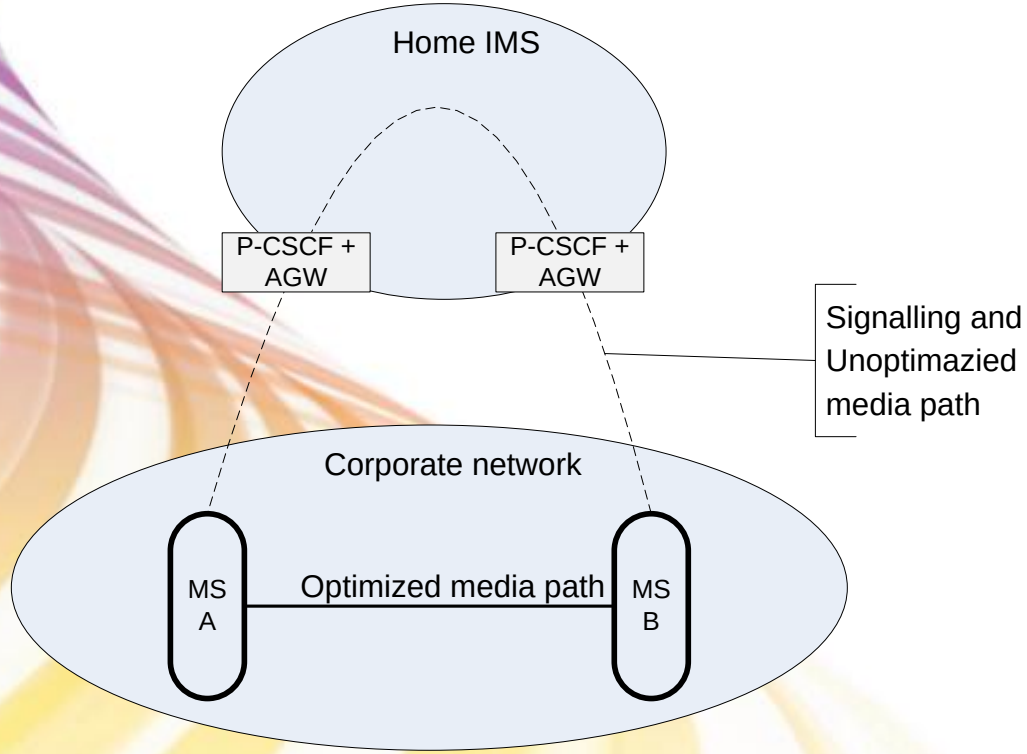


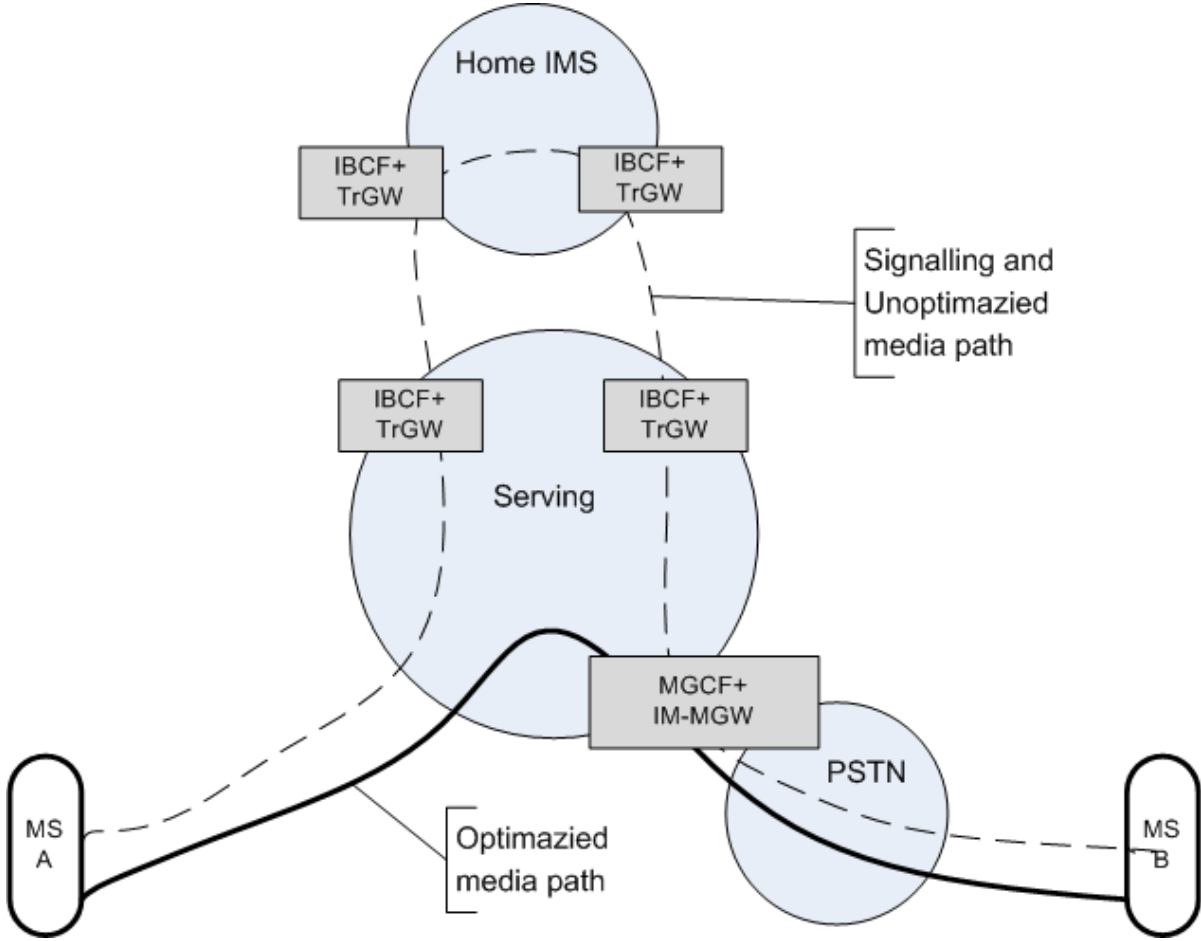



© Nokia Siemens Networks 2011

# RAVEL

- IMS VoIP roaming scenarios, TR23.850
- Ongoing work in Rel11
- Stage 2 and stage3 details are open

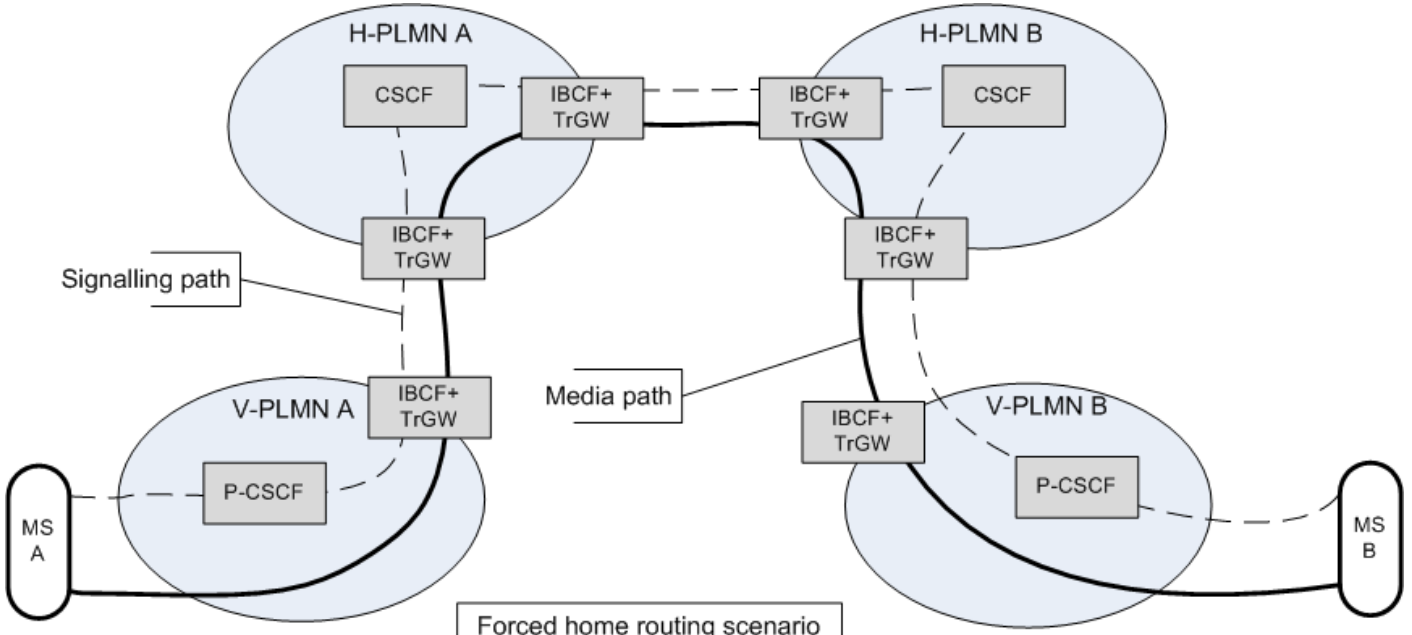


Forced home routing scenario
TR 23.850

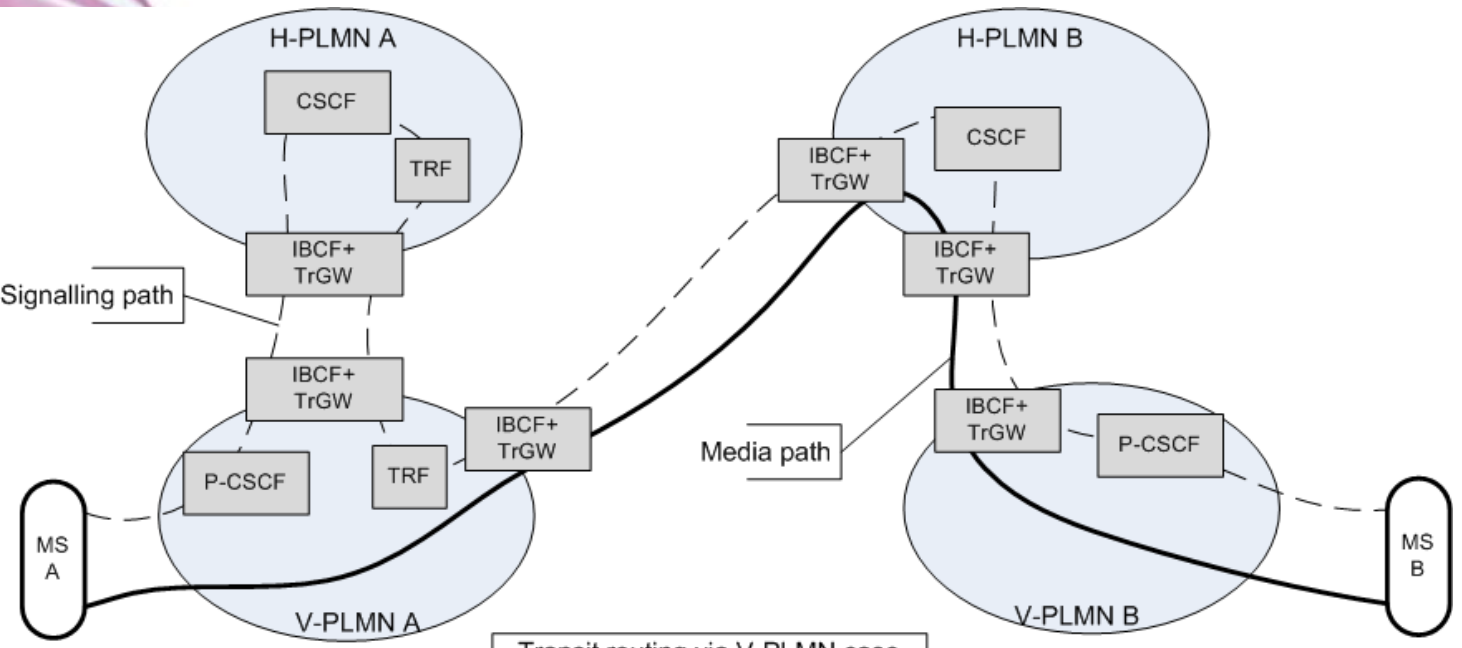


Transit routing via V-PLMN case
TR 23.859

Nokia Siemens Networks

# Conclusion, discussion

- Media may not available in each cases for interception
- Static provisioning of CC interception place may not satisfy the requirements → the CC interception place has to be determined dynamically depending on the certain call scenario
- Detectability v.s. extension of signaling with additional information
- Requirements compromise: loss of capability v.s. feasibility
- IMS VoIP roaming details are open


© Nokia Siemens Networks 2011

# Thank you

Nokia Siemens Networks