3GPP TSG RAN Meeting #99
Rotterdam, Netherlands, March 20-23, 2023

Agenda Item: 9.2.3
Document for: Discussion and Decision

RP-230360

# Discussion on ambient IoT

NTT DOCOMO, INC.

# Discussion point 1: Use case grouping

Topic 2 - Handling of SA1 use cases in RAN

***Agreement:***

- Define the groups of Grouping A as follows, as a start point:
  - Indoor
  - Outdoor
  - Indoor/outdoor
- Define the groups of Grouping B as follows, as a start point:
  - Inventory
  - Sensors
  - Positioning
  - Command
- Whether to incorporate Grouping A and Grouping B according to Approach 1 (include both separately) or Approach 2 (Group first by A, and second by B) will be decided in RAN#99.
- Mapping of SA1 use cases to the groups of each grouping will be discussed in the next meeting, including whether RAN needs to attempt that mapping, or only has to define the groups.

# Discussion point 1: Use case grouping

## Approach 1 (include both separately)

| Group A | Use cases (Clause 5.# in TR22.840) |
|---|---|
| Indoor | 1, 4, 5, 6, 13, 14, 16, 21, 23 |
| Outdoor | 3, 19, 22, 24, 25 |
| Indoor or outdoor | 2, 7, 8, 12, 26 |

| Group B | Use cases (Clause 5.# in TR22.840) |
|---|---|
| Inventory | 1, 2, 4, 5, 7, 11, 15, 16, 21, 22, 23, 24, 25, 27 |
| Sensors | 3, 6, 13, 17, 18, 19, 20, 22, 23, 24, 25 |
| Positioning | 1, 2, 3, 4, 8, 9, 10, 12, 14, 16 |
| Command | 11, 17, 26, 28 |
| Tracking | 4, 7, 8, 27 |

## Observation:

- Use cases identified in TR22.840 can be categorized into Groups A and/or B
  - » Not all use cases can be categorized into either Groups A or B due to lack of information

# Discussion point 1: Use case grouping

docomo

- **Approach 2 (Group first by A, and second by B)**

- **Observation:**
  - Some combinations of {Group A, Group B} does not have corresponding use cases
- **Proposal:**
  - Adopt Approach 2 to set representative use cases
  - Combinations of {Group A, Group B} which do not have corresponding use cases will not be discussed further in this SI
    - » {Indoor, Command}, {Indoor, Tracking}
    - » {Outdoor, Command}, {Outdoor, Tracking}
    - » {Indoor or outdoor, Sensors}

| Group A | Group B | Use cases (Clause 5.# in TR22.840) |
|---|---|---|
| Indoor | Inventory | 1, 4, 5, 16, 21, 23 |
| | Sensors | 6, 13, 23 |
| | Positioning | 1, 4,14 |
| | Command | |
| | Tracking | |
| Outdoor | Inventory | 22, 24, 25 |
| | Sensors | 3, 19, 22, 24, 25 |
| | Positioning | 3 |
| | Command | |
| | Tracking | |
| Indoor or outdoor | Inventory | 2, 7 |
| | Sensors | |
| | Positioning | 2, 8, 12 |
| | Command | 26 |
| | Tracking | 7, 8 |

# Discussion point 2-1: Details of topologies

Topic 4 - Deployment scenario characteristics
Topic 4-4: Connectivity topology

***Agreement:***

- Topology (1): BS <-> Ambient IoT device
  - NOTE 1: Includes the possibility of BS Rx and BS Tx in different BSs
- Topology (2): BS <-> intermediate node <-> Ambient IoT device
  - NOTE 1: Intermediate node can be relay, IAB, UE, repeater, etc. which is capable of ambient IoT
- Topology (3): BS <-> assisting node <-> Ambient IoT device <-> BS
  - NOTE 1: Assisting node can be relay, IAB, UE, repeater, etc. which is capable of ambient IoT
  - FFS: If the two BS can be different
- Topology (4): UE <-> Ambient IoT device
- FFS: Topology (5) UE <-> Ambient IoT device <-> {BS or UE}

NOTE: For potential topology (5), discuss its relation with other topologies, its necessity, etc. in RAN#99.
NOTE for all topologies: The Ambient IoT device may be provided with carrier wave from another node(s) either inside or outside the topology
NOTE for all topologies: The links in each topology may be bidirectional or unidirectional
FFS: Whether to consider combination of different topologies in the study.
FFS: BS, UE, or assisting node could be multiple BSs, UEs or assisting nodes, respectively.

# Discussion point 2-1: Details of topologies

**Topology (3):** BS <-> assisting node <-> A-IoT device <-> BS

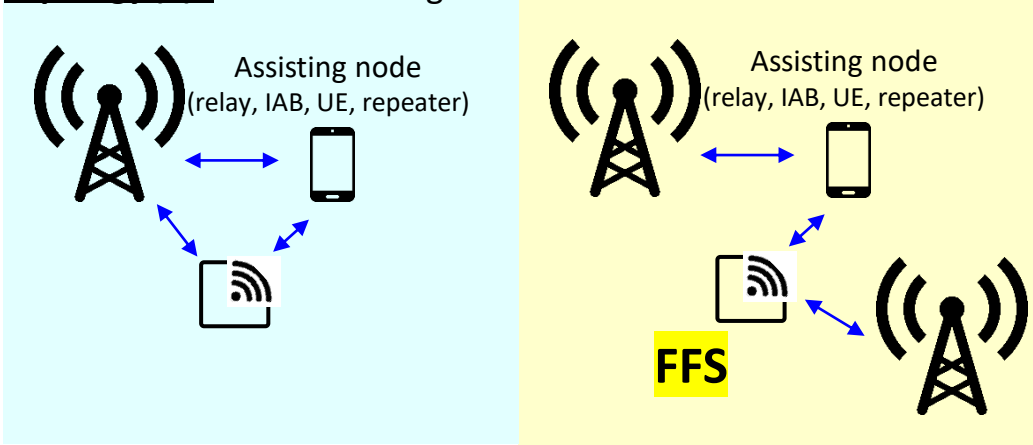


**Topology (2):**

BS <-> intermediate node <-> A-IoT device

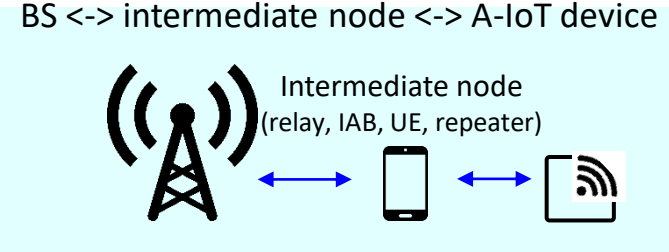


- **Observation:**
  - For topology (3), no feasible deployment scenarios can be seen for the case when the two BS are different
    - » If coverage is the issue, topology (2) can be used
- **Proposal:**
  - For topology (3), the two BS are the same

# Discussion point 2-1: Details of topologies

**FFS: Topology (5):** UE <-> Ambient IoT device <-> {BS or UE}

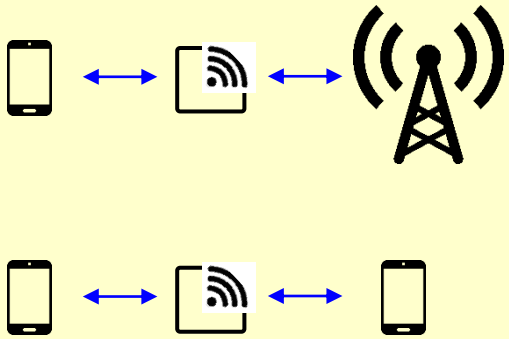

FFS: Whether to consider combination of different topologies in the study.
FFS: BS, UE, or assisting node could be multiple BSs, UEs or assisting nodes, respectively.

**Topology (1):** BS <-> A-IoT device

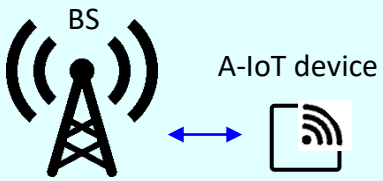


**Topology (4):** UE <-> A-IoT device

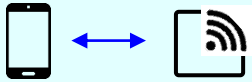

- **Observation:**
  - Topology (5) can be seen as a combination of Topologies {1, 4} or {4, 4}
- **Proposal:**
  - Remove FFS from Topology (5)
  - Above FFS will not be discussed further in this SI

# Discussion point 2-2: Spectrum

Topic 4 - Deployment scenario characteristics
Topic 4-5: Spectrum

***Agreement:***

- Spectrum in a deployment scenario is: licensed FDD, licensed TDD, unlicensed.
  - Note: Further discuss if the study should apply any limitations to the cases for which unlicensed spectrum is studied.

- **Observation:**
  - Unlicensed spectrum can be used mainly for indoor scenarios due to the interference
  - Specification on unlicensed spectrum would require more WG-level work
- **Proposal:**
  - Incensed spectrum should be prioritized in this SI

# Discussion point 3: Device categorization

Topic 5 - Devices
Topic 5-2 – Categorization

***Working assumption:***

- This framework is used to categorize energy storage:
  - Storage 1: no storage at all
  - Storage 2: Up to E1 joules
  - Storage 3: Up to E2 joules
- FFS: In RAN#99 value(s) of E1, E2 and it is possible that E1=E2, in which case we have only two storage categories. Note in this case that storage 2 and 3 could be replaced by a single description such as ”limited energy storage”, instead.

***Agreement:***

- The following set of Ambient IoT devices are considered in the SI:
  - Device A: No energy storage, no independent signal generation, i.e. backscattering transmission
  - Device B: Has energy storage, no independent signal generation, i.e. backscattering transmission. Use of stored energy can include amplification for reflected signals
  - Device C: Has energy storage, has independent signal generation, i.e. active RF component for transmission
- FFS: Whether to include device function
- FFS: Whether to include a target maximum power consumption for each device
- FFS: Whether/how to describe what stored energy is used for (in addition to the statement for Device B)
- FFS: if combination of these devices will be considered.

# Discussion point 3: Device categorization

| | Device A | Device B | Device C |
|---|---|---|---|
| Storage 1 | Tx only or [Tx&Rx] | N/A | N/A |
| Storage 2 | N/A | Tx only or [Tx&Rx] | Tx only or Tx&Rx |
| Storage 3 | N/A | Tx only or [Tx&Rx] | Tx only or Tx&Rx |

- Storage 1: no storage at all
- Storage 2: Up to E1 joules
- Storage 3: Up to E2 joules

- Device A: No energy storage, no independent signal generation, i.e. backscattering transmission
- Device B: Has energy storage, no independent signal generation, i.e. backscattering transmission. Use of stored energy can include amplification for reflected signals
- Device C: Has energy storage, has independent signal generation, i.e. active RF component for transmission

- **Observation:**
  - No use case can be seen for the highlighted device function in the above table
- **Proposal:**
  - Tx only for {Storage 1, Device A}, {Storage 2, Device B}, {Storage 3, Device B}, {Storage 2, Device C}, {Storage 3, Device C}
  - Tx&Rx for {Storage 2, Device C}, {Storage 3, Device C}

# Discussion point 4: RAN design targets

- SID in RP-223396

- Formulate a set of RAN design targets based on the identified deployment scenarios and their characteristics for the relevant use cases, at least including
  - Power consumption
  - Complexity
  - Coverage
  - Data rate
  - Positioning accuracy

  NOTE: The requirements from SA1 on the relevant use cases shall be taken into consideration.

  NOTE: The study shall aim to provide better coverage compared to existing non-3GPP technologies for the relevant use cases.

  NOTE: Other RAN design targets in relation to connection density, mobility, security, latency, reliability etc. may be discussed, if necessary for the relevant use cases.

  NOTE: Detailed definitions of the RAN design targets should be discussed during the study.

# Discussion point 4: RAN design targets

- **Observation:** Following KPI can be seen for the identified rUCs from TR22.840

| rUC | KPI | | | | | |
|---|---|---|---|---|---|---|
| | Latency | Availability/ Reliability | Data rate | Coverage | Mobility | Positioning accuracy |
| Indoor-Inventory | >100ms – >10 s | 99.9 % | 0.1 – <1 kbps | <30 – 250 m | 3 – 10 km/h | - |
| Indoor-Sensors | 1 – 20 s | 99.9 % | <0.5 - <1 kbps | 10 – 250 m | stationary | - |
| Indoor-Positioning | - | - | - | - | - | 2 – 3 m |
| Outdoor-Inventory | >1 - 30s | - | <0.5 - <1 kbps | FFS | stationary | - |
| Outdoor-Sensors | 1 – 30 s | 99.9 % | <0.5 - <1 kbps | 50-200m | stationary | - |
| Outdoor-Positioning | - | - | - | - | - | |
| Indoor/Outdoor-Inventory | >100 ms - >1 s | 99% | 256 bps- <2kbps | Indoor: 50m<br>Outdoor: 200m | <6km/h | - |
| Indoor/Outdoor-Positioning | - | - | - | - | - | 1 – 3 m |
| Indoor/Outdoor-Command | | | | | | - |
| Indoor/Outdoor-Tracking | >1 - >5 s | 99% | FFS | Indoor: 10m<br>Outdoor: 100m | stationary | - |

- **Proposal:** Above table is used as starting point to define RAN design targets