Qualcomm

RP-211943

3GPP TSG RAN#93e
Electronic Meeting, Sep 13 - 17, 2021
Agenda Item: 9.0.3

# Views on NTN evolution for Rel-18

5G

# Background

- In this contribution, we present our views on the following areas discussed under thread [RAN93e-R18Prep-08] (summary available in RP-211658):

- NR NTN:
  - repetitions and diversity techniques for the relevant channels (including PRACH and techniques to enable full-power UL transmission and reduced polarization loss)
  - Improve the performance of low-rate codecs in link budget limited situation including reducing RAN protocol overhead. (Initial work in RAN1/RAN2 and liaise with SA2/SA4 as necessary)
  - Enhanced beam management

- NTN IOT:
  - Improved GNSS operations for a new position fix for UE pre-compensation during long connection times and reduced power consumption
  - Mobility enhancements
  - Discontinuous coverage & store-and-forward.

# Repetitions, Diversity and Full-Power UL transmission

# Description

- Objective is to ensure basic services for smart phone devices
  - Voice
  - Low-rate data (e.g. SMS)

- Smart Phone Characteristics
  - Typically have multiple PAs and transmit antennas
    - Linear polarized
    - May capable of coherent MIMO
  - UL transmission will typically be narrowband due to link budget

# Potential Enhancements

- Repetition and diversity for bottle neck channels (starting from rel-17 covEnh)
- Techniques to enable *full-power* UL transmission for smart phones: increased transmit power, diversity, and reduced polarization loss.
  - Enhancements to take full advantages of existing techniques
- New power class: PC2, PC1.5 (for 26 dBm+2
- For evaluation results, refer to the appendix.

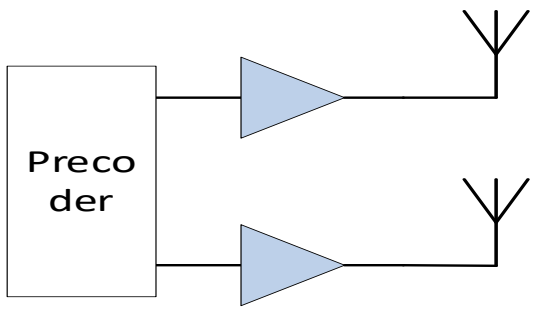


**Precoder cycling**: Full power and spatial diversity
**Network controlled precoder (via SRS codebook):** Full power and matched tx/rx polarization (requiring cross-polarized tx antennas)

# Protocol overhead reduction

# Protocol headers for voice bearer

- For each packet generated by voice codec (e.g., per 20ms), protocol headers incur signification overhead.
- At initial state of ROHC, one packet includes
  - RTP header = 12 bytes
  - UDP header = 8 bytes
  - IP header = 20 bytes
  - SDAP header = 1 byte
  - PDCP header (12 bit SN, 4 byte UP IP) = 6 bytes
  - RLC header (6 bit SN, segmented SDU) = 3 bytes
  - MAC header (8 bit L field) >= 2 byte
  - Total overheads > 51 bytes
- According to current specifications, the 3GPP protocol overhead for 5.6 kbps (1 frame/20ms) codec is 36%, even with usage of ROHC:
  - 1-byte SDAP header and 4-byte UP IP overhead are not considered in the calculation.
- **For voice service using NTN, these overheads can be reduced.**

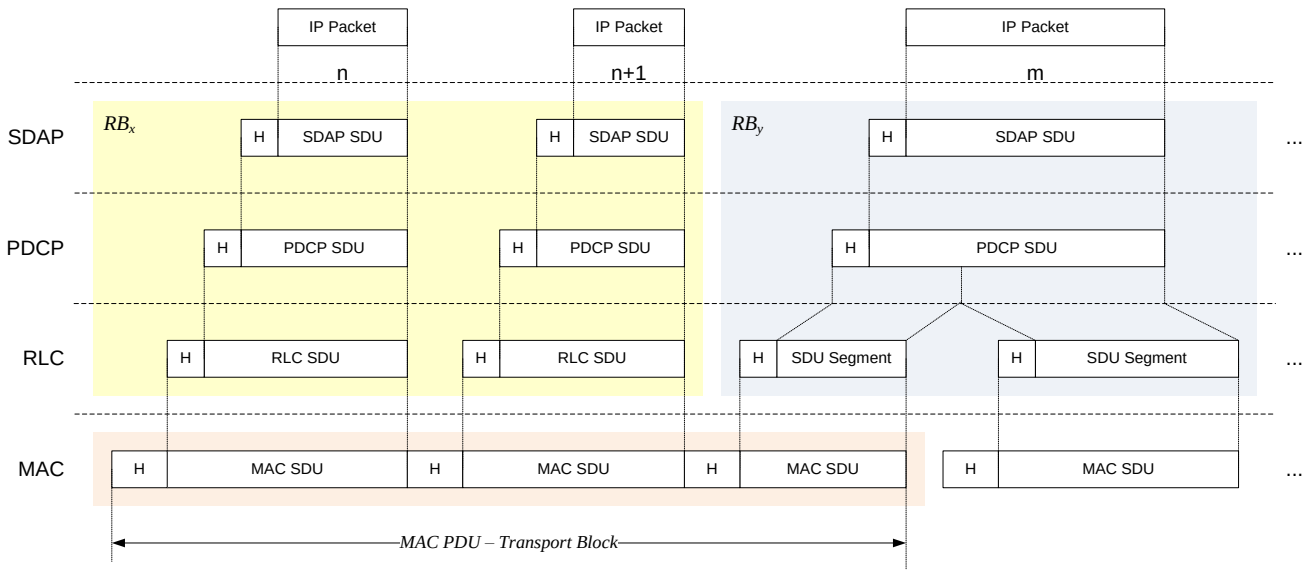


**TS 38.300 Figure 6.6-1: Data Flow Example**

# Protocol overhead reduction

- Examples of (small) enhancements (mostly RAN2) which can reduce the protocol overhead significantly
  - PDCP header
    - Integrity protection for voice DRB can be disabled (but ciphering is still used). This saves 4 bytes overhead.
    - SDAP header can be removed for voice bearer. This reduces 1 byte overhead.
  - RLC header
    - Limit number of segments, consider RLC TM mode for voice bearer without RLC segmentation
  - MAC header
    - Configure TBS/configured grant periodicity to fit the codec rate and avoid unnecessary MAC sub-headers.
  - For the AMR 4.75kbps (codec rate of 5.6kbps after adding RTP protocol header), the baseline overhead is as follows:
    - The overhead % will be even larger for lower rates (showing example for 4.8kbps as well, although it doesn't correspond to any 3GPP codec)
  - The potential gains by removing overhead are up to ~2dB in this setting.

| Codec (kbps) | Inter tx time (ms) | voice Payload (byte) | ROHC header | PDCP (SN 12 bit) | RLC | MAC | TBS (bits) | % overhead | Approx dB gain if % overhead was zero |
|---|---|---|---|---|---|---|---|---|---|
| 5.6 (AMR 4.75) | 20 | 14 | 3 | 2 | 1 | 2 | 176 | 36% | 1.93dB |
| 4.8 | 20 | 12 | 3 | 2 | 1 | 2 | 160 | 40% | 2.21dB |

# Beam Management and BWP Operation

# Satellite Beam Management and BWP operation

- Scenarios
  - A satellite typically have multiple satellite beams with frequency reuse
  - Satellite beam switch can be realized by BWP switching
    - For earth-moving beams, beam switching is preferred over cell switching to save overhead and reduce connection interruption
  - Satellite beam switching from UE perspective is a frequency/BWP change without change of spatial relationship
  - Satellite beam switching is often highly predictable
- Potential Enhancements (Both FR1 and above 10GHz)
  - Signaling to support flexible SSB/Satellite Beam/BWP mapping
  - Enhancements on BWP switching to support fast and configured satellite beam switching
  - Enhancements to support RLM outside of the active BWP

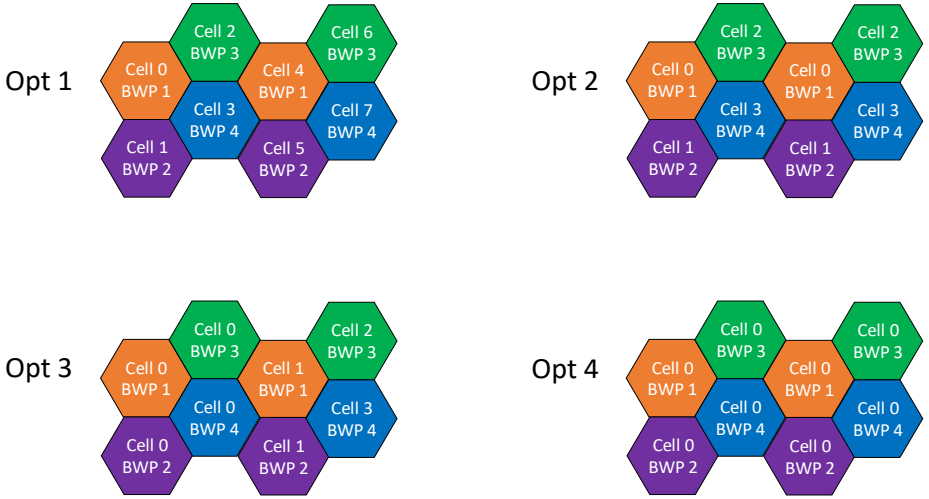

# Rel-18 IoT NTN

# Rel-18 IoT NTN–PHY aspects for inclusion/clarification

- UEs “without GNSS capabilities” should be supported, as opposed to just “improved GNSS operations”
  - This includes facilitating such UEs to access the network from IDLE, e.g., via new, resilient (N)PRACH designs, and corresponding time/frequency control loops.
- Support for “longer connections” than Release 17, such as connected mode DRX (CDRX) operation
  - This may involve enhancements to uplink synchronization mechanisms, e.g., related to determining and tracking satellite and/or UE location during a connection
- Support for beam-based (L1/L2) mobility, which includes (in NB-IoT) support for Ncells with multiple anchor carriers (e.g., one per beam)

# Rel-18 IoT NTN – RAN2 / upper layer aspects

- Area specific SIB / mobility enhancements:
  - As frequent acquisition of SIB is not power efficient in moving cell scenario, similar mechanism of area specific SIB as in NR can be considered.
- Enhancement of discontinuous coverage
  - A complete solution for AS layer, NAS layer, RAN and CN to efficiently handle the discontinuous coverage.
  - For example, inter-RAT selection/PLMN selection during out of coverage.
- Support for store-and-forward on-board NTN payload
  - To address the issue of sparse deployment of satellite as well as NTN gateways for low cost IoT applications.
- Evaluating LTE IoT features up to Rel-17 for NTN (leftovers)
  - As there will be no time for evaluating such features in Rel-17 IoT NTN, they should be evaluated case by case in Rel-18, for example
    - Support of 5GC
    - CP and UP CIoT optimization
    - PUR, MT EDT
    - RRC INACTIVE for eMTC
    - (G)WUS, relaxed monitoring
    - PDCCH-based HARQ-ACK
    - Multiple TBs scheduling

# Appendix:
# Full-Power UL Transmission


Confidential - Qualcomm Technologies, Inc. and/or its affiliated companies - May Contain Trade Secrets

# Performance Comparison

## Balanced power and uncorrelated channel

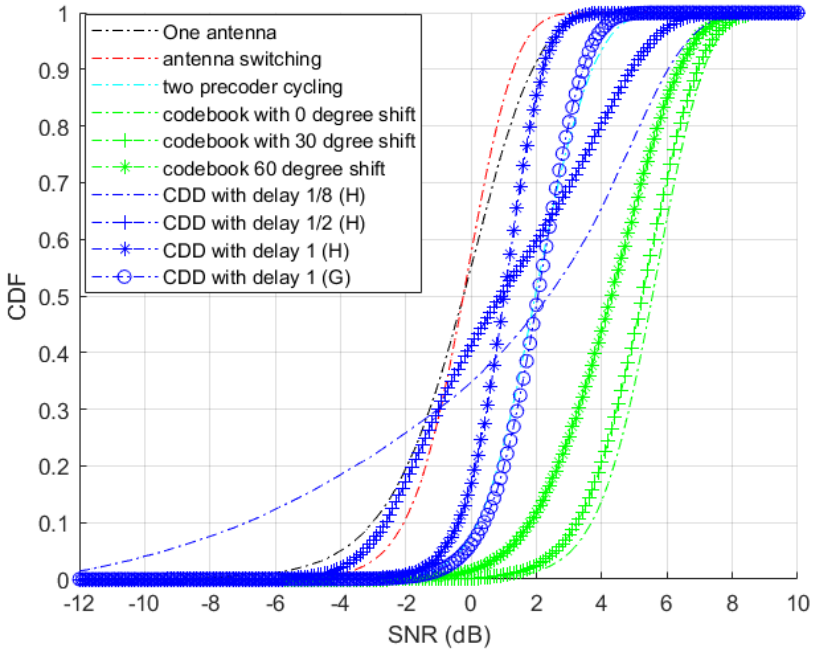


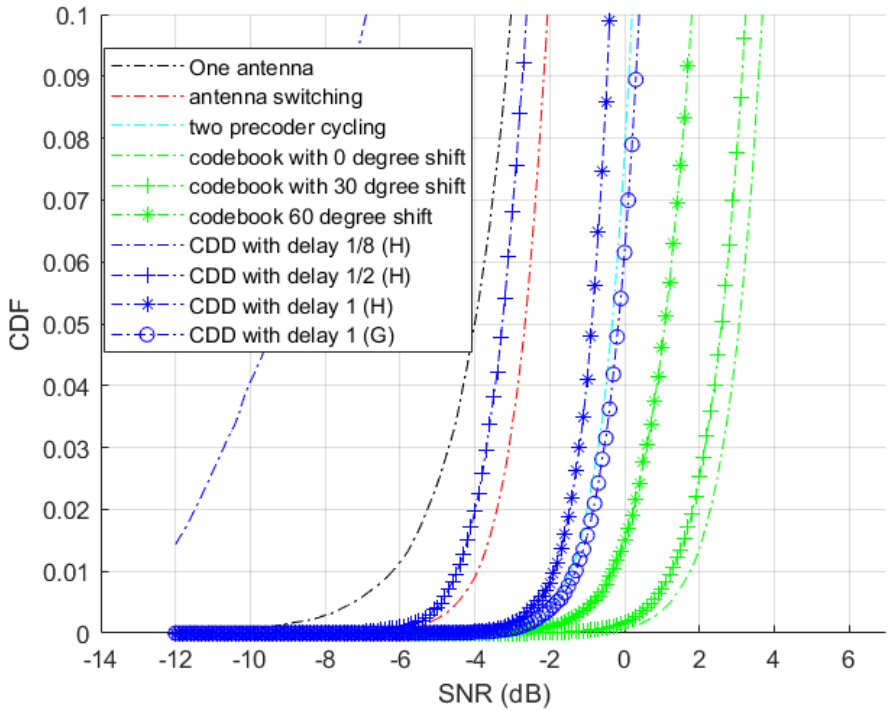


| Schemes | One antenna | Antenna switching | Two precoder switching | Codebook with $0^0$ - phase shift | Codebook with $30^0$ - phase shift | Codebook with $60^0$- phase shift | CDD with 1/8 Nyquist sample delay (harmonic) | CDD with ½ Nyquist sample delay (harmonic) | CDD with 1 Nyquist sample delay (harmonic/geometric) |
|---|---|---|---|---|---|---|---|---|---|
| 10-percentile SNR (dB) | -3.1 | -2.1 | 0.2 | 3.6 | 3.2 | 1.8 | -6.8 | -2.6 | -0.4/0.4 |
| 1-percentile SNR (dB) | -6.3 | -3.9 | -1.4 | 1.7 | 1.3 | -0.3 | <-12 | -4.6 | -1.9/-1.4 |

# Discussions

## Balanced power and uncorrelated channel

- Precoder cycling
  - About 2.3 dB gain over antenna switching
  - Similar performance as CDD with delay of Nyquist sample duration (evaluated with geometric mean) or 0.5 to 0.6 dB gain over CDD (evaluated with harmonic mean)
  - polarization directions of the two antennas don't matter
- Precoder with SRS
  - About 5.8 dB over antenna switching or 7 dB to 8 dB gain over one antenna.
  - About 0.4 dB loss and 2 dB loss with 30-degree and 60-degree phase shifts w.r.t SRS transmission, respectively.
  - Coherent time requirement needs to be extended to at least 40ms due to RTD.
  - Requires cross polarization (if two have the same polarization direction, performance is comparable to CDD assuming that polarization direction is random due to UE rotation)
- CDD
  - A delay of nearly Nyquist sample duration is needed to have comparable performance as precoder cycling
  - Channel is highly non-flat even with LOS and additional performance (0.5 dB or more) loss due to channel estimation is expected (H vs G).

# Performance

## Balanced power and fully correlated channel

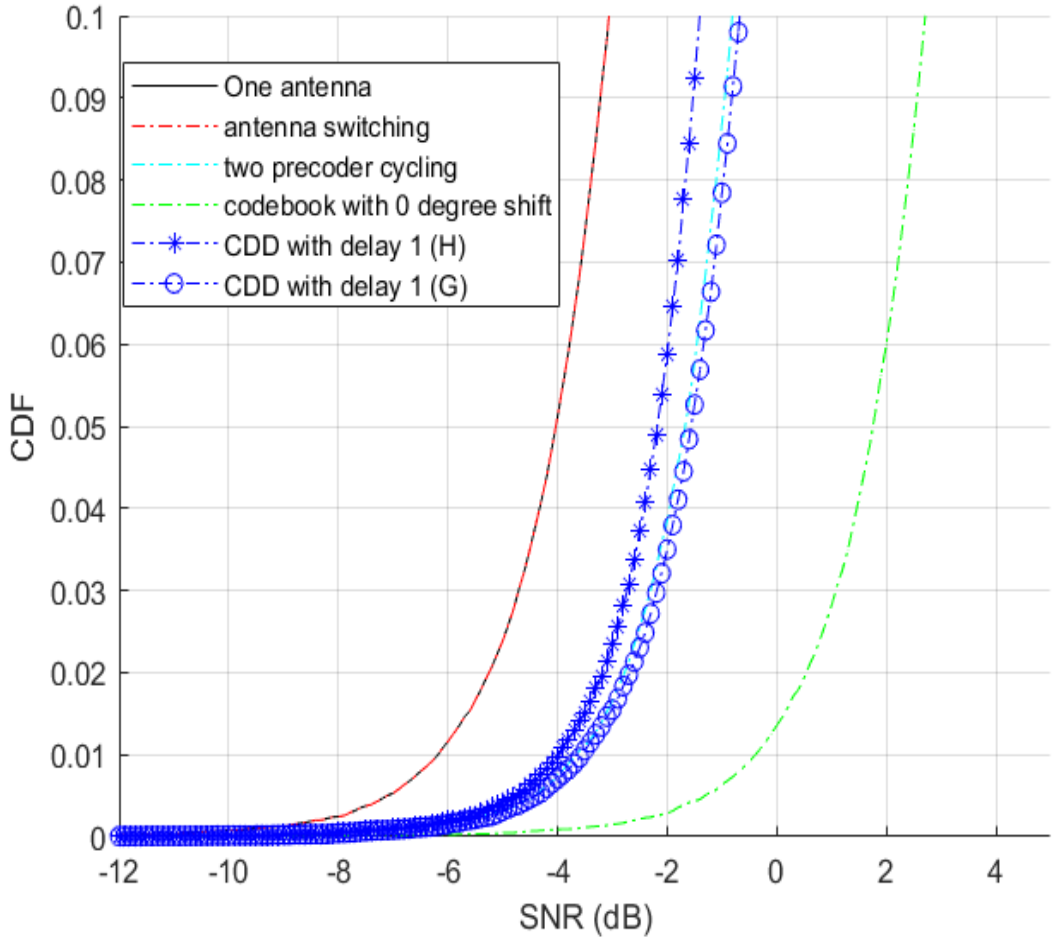


| Schemes | 10-percentile SNR (dB) | 1-percentile SNR (dB) |
|---|---|---|
| One antenna | -3.1 | -6.3 |
| Antenna switching | -3.1 (-2.1) | -6.3 (-3.9) |
| Two precoder cycling | -0.7(0.2) | -3.7 (-1.4) |
| Codebook | 2.7 (3.6) | -0.4 (1.7) |
| CDD with delay 1 (H) | -1.4 (-0.4) | -4 (-1.9) |
| CDD with delay 1 (G) | -0.7 (0.4) | -3.7(-1.4) |

Note: Values in the bracket are for uncorrelated channel.

# Discussions

## Balanced power and fully correlated channel

- For the flat Rician channel under consideration
  - Channel (transmit) diversity gain is about 1 dB at 10 percentile SNR and > 2dB at 1 percentile SNR
- Power gain due to the use of two antennas can be maintained
  - 2.4 dB for precoder cycling and 3 dB for codebook transmission

# performance

## Imbalanced power and uncorrelated channel

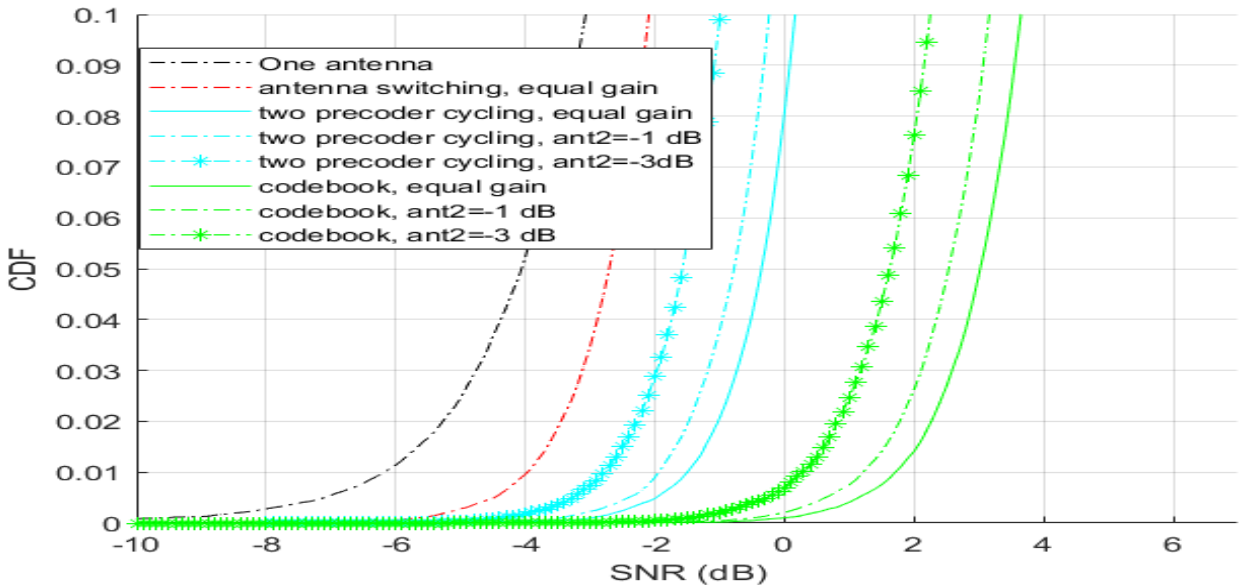


| Schemes | One antenna | Antenna switching equal gain | Two-precoder cycling, equal gain | Two precoder cycling, ant2=-1 dB | Two precoder cycling, ant2=-3 dB | Codebook,equal gain | Codebook, ant2=-1 dB | Codebook ant2=-3 dB |
|---|---|---|---|---|---|---|---|---|
| 10-percentile SNR (dB) | -3.1 | -2.1 | 0.2 | -0.3 | -1 | 3.6 | 3.1 | 2.3 |
| 1-percentile SNR (dB) | -6.3 | -3.9 | -1.4 | -1.9 | -2.8 | 1.7 | 1.2 | 0.3 |

# Discussions

## Imbalanced power and uncorrelated channel

- Diversity gain and polarization gain is kept with imbalanced power
- Performance difference is about the same as or less than the loss in transmit power
  - 0.5 dB performance loss if the power of the second antenna is -1 dB vs 0.5 dB transmit power loss
  - 0.9 dB performance loss if the power of the second antenna is -3 dB vs 1.24 dB transmit power loss

# Conclusions

- If cross-polarization and antenna coherence (>40ms) are feasible, use precoder based UL transmission; otherwise, precoder cycling or large-delay CDD is preferred.
- For CDD, delay comparable or larger than the Nyquist sample is needed and its performance is expected to be 0.5 dB worse than two-precoder cycling.
- 8 dB performance gain can be achieved with two cross-polarized antennas @ 1-percentile SNR
  - 3dB gain due transmit power
  - <3 dB gain due to polarization matching
  - >2dB gain due to channel(transmit) diversity
- Limited power imbalance among antennas does not affect diversity and polarization gain.
  - 6.6 dB performance gain (@1-percentil) can be achieved with an additional antenna @-3 dB power and codebook transmission