3GPP TSG RAN Release 19 workshop

Taipei, 15 - 16 June, 2023

RWS-230310

RAN Visible QoE in Rel-19

Agenda Item: 5

Source: Xiaomi

Document for: Discussion

RAN Visible QoE Collection for Mobility Optimization

Motivation:

- Mobility optimization is one of the most important aspects in network optimizations.
- UE may suffer bad experience during mobility even though the handover is successful.

Proposal:

- RVQoE measurement can be triggered by mobility related events.
- RVQoE report can be forwarded for mobility optimization.

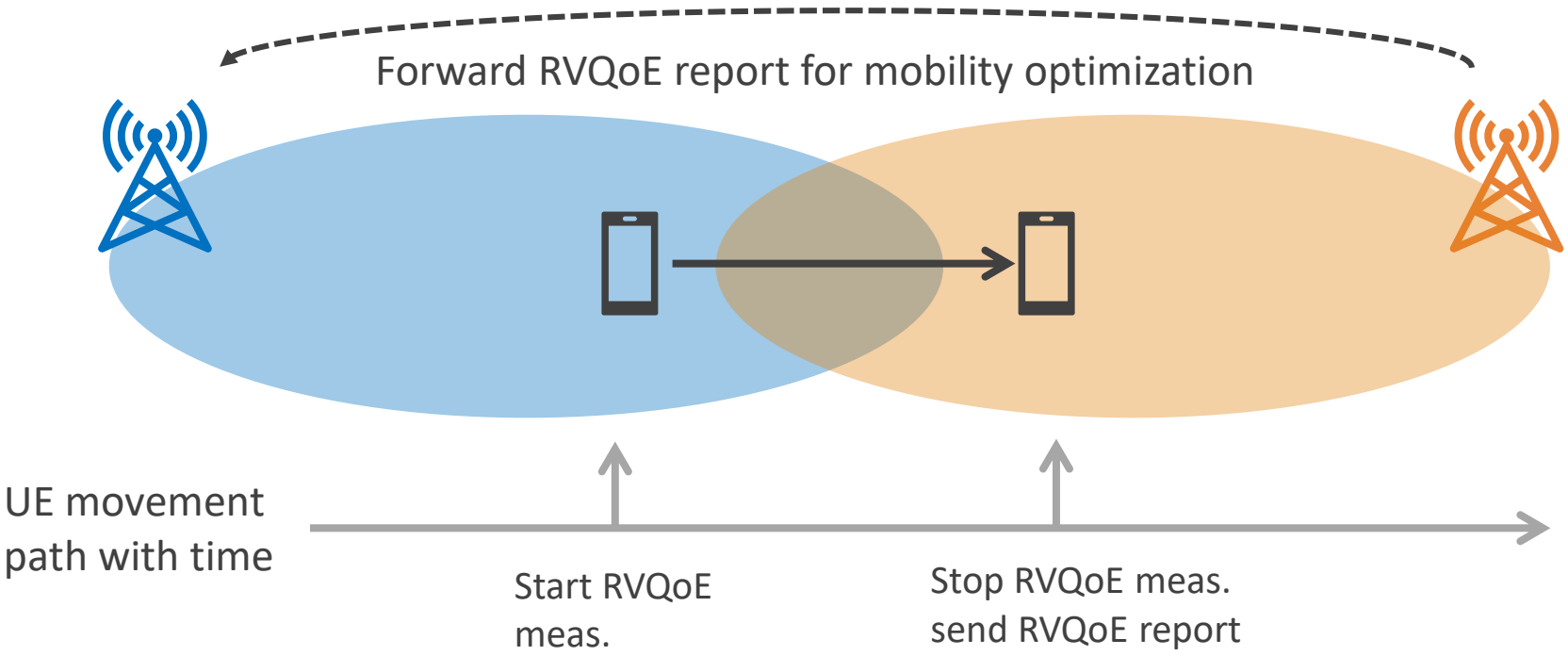

RAN Visible QoE Reporting via lower layer signalling

Motivation: The main purpose of RVQoE is for real-time scheduling, but existing reporting mechanism costs longer time, compared to the scheduling periods, which may lead to improper scheduling decisions.
Proposal: Support of RVQoE reporting via lower layer signalling for accurate scheduling.

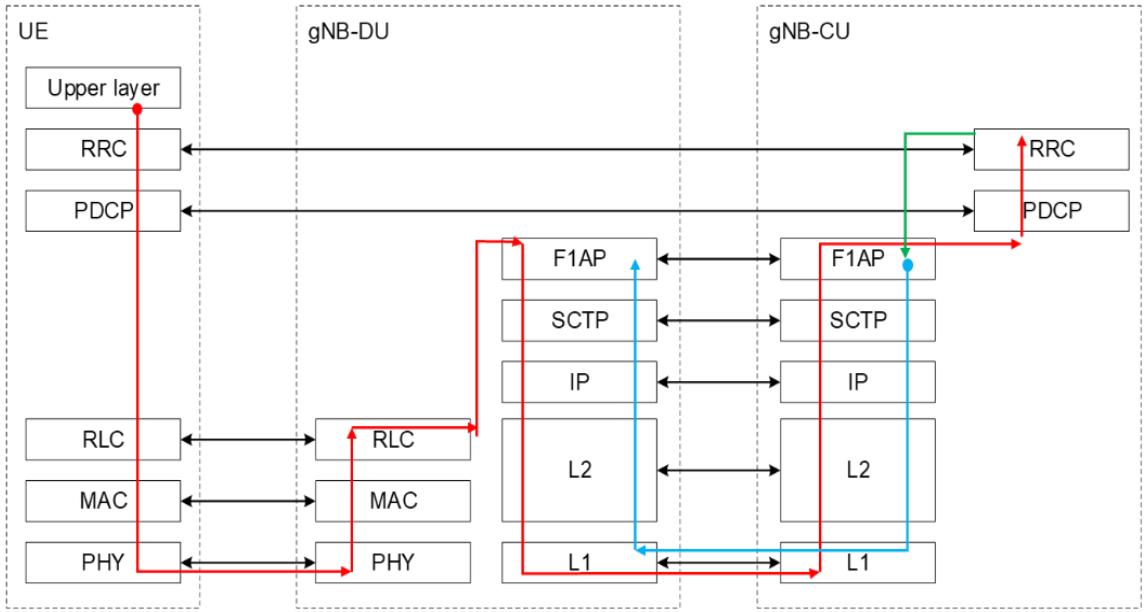

RVQoE reporting via higher layer (existing mechanism)

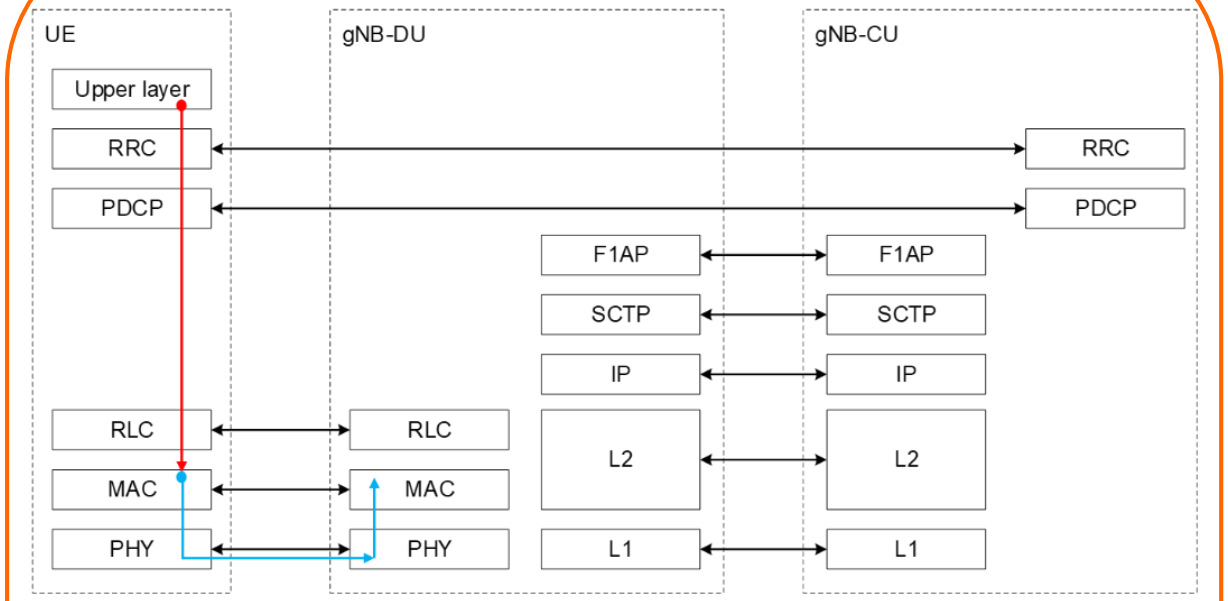

RVQoE reporting via lower layer (greatly reduce latency)

RAN Visible QoE Value

Motivation:

- RVQoE value had been discussed since R17, but it's not supported in R18, due to the reason that it's hard for both UE and gNB to calculate a MOS value defined by SA4.
- RVQoE value can be used for the RAN specific purposes.

Proposal:

- Identify the RAN requirements on RVQoE value, e.g. lower latency or signalling overhead.
- Define RVQoE value based on the RAN requirements, can refer to CQI, which is also used for scheduling.

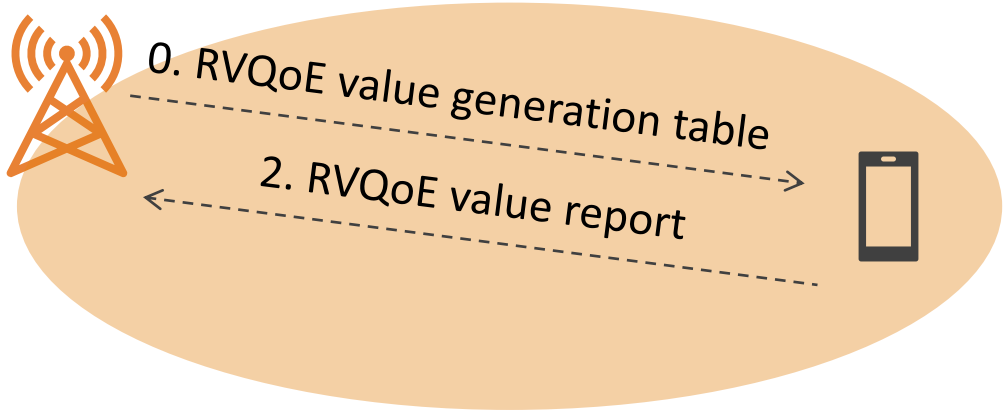

1. Generate the RVQoE value according to the table predefined or received from gNB

Conclusions

The following can be considered for RVQoE in R19:

Mobility optimization:

- RVQoE measurement can be triggered by mobility related events.
- RVQoE report can be used for mobility optimization.

Accurate scheduling:

- Support of RVQoE reporting via lower layer signalling for accurate scheduling.

RAN Visible QoE Value:

- Identify the requirements on RVQoE value, e.g. lower latency or signalling overhead
- Define RVQoE value based on the RAN requirements.

Thanks