3GPP TSG RAN Rel-19 workshop
Taipei, June 15 - 16, 2023
Agenda Item: 5
Document for: Discussion

RWS-230252

Study of customer-installed FR2-femto (NW-controlled access point)

NTT DOCOMO, INC.

Background (Justification) – 1/2

- Difficulty of efficient FR2 support
  - The initial NR specification supports FR2 spectrum and several enhanced mechanisms were introduced in subsequent releases for more efficient FR2 support
  - However, unfortunately, **it is difficult in practical to use FR2 efficiently and effectively based on conventional NW deployments**
- Another way for effieicnt FR2 support
  - In 4G era, femtocell/home eNB concept was discussed and specified. Having said that, it is difficult to say in our veiw that such a mechanism is/was widely-used over the world, due to less motivation or disadvantage
  - Meanwhile, for 5G NW especially FR2, **femtocell/home gNB concept** will be a possibility to solve the abovementioned FR2-related problem
    - » ➔ RWS-230262: Proposal of FR2-femto support from DCM (only RAN4 impact is assumed)

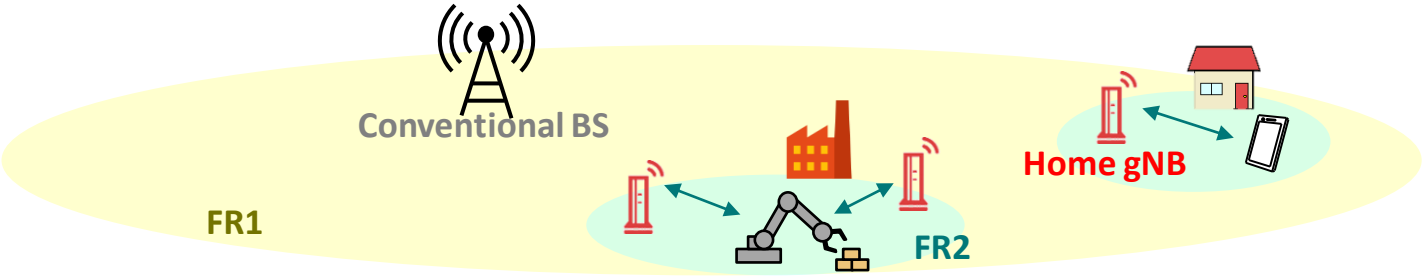

Background (Justification) – 2/2

- Necessity of **customer-installed FR2-femto** – called **'NW-controlled access point (NC-AP)'**
  - Although FR2-femto is good as a kind of temporary solution, it would be insufficient as a final solution at least from the following:
    - » A – **Interference**: If the number of FR2-femto NW is increased, interference between conventional NW and FR2-femto NW or between multiple different FR2-femto NW becomes larger and non-negligible
    - » B – **Promptness**: Basically home eNB/gNB is installed by NW operator. Wi-Fi AP may be easier from customer perspective
    - » C – **Flexibility**: both CN C-plane and U-plane are maintained in NW operator side, which degrades flexibility of NW architecture and also latency performance

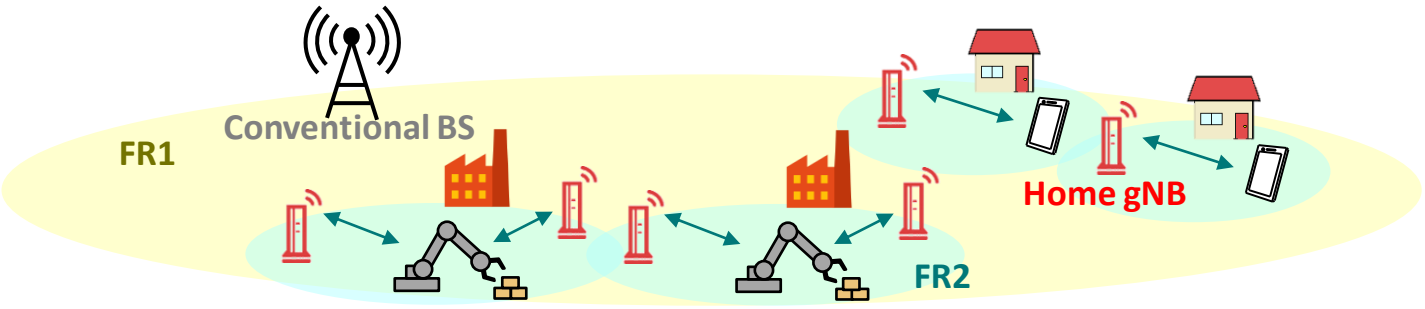

  - NC-AP concept is a promising way for future femto-type NW
    - » With a mechanism for total NW optimization to avoid chaotic NW
    - » Details can be found in the next page
    - » Note: Frequency range in NC-AP is not limited to FR2
  - Normal FR2-femto as the first step (RWS-230262) and NC-AP as the second step

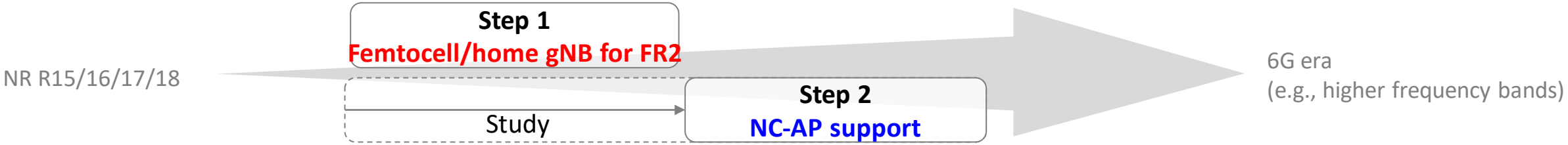

Concept of NC-AP

- NC-AP NW = **Customer-installed** femto NW with **control function** from NW operator side
  - Feature
    - » NC-AP device has BS-like capabilities
    - » Each customer decides/installs NC-AP device as desired
    - » NW operator controls NC-AP remotely; e.g., whether to permit operation as a kind of BS, which area to be covered
      - – Optimization of NC-AP NW is performed by enhanced 'SON' function well-designed in NW operator side
  - Connection
    - » NC-AP device is connected to NW operator side and to local NW or broadband Internet
    - » Users perform initial access to NC-AP that is found as a normal gNB
  - CN function
    - » C-plane (e.g., authentication) for both NC-AP and users accommodated in the NC-AP NW is maintained in NW operator side
    - » U-plane for users accommodated in NC-AP NW is handled by the NC-AP: User data is not routed through BS

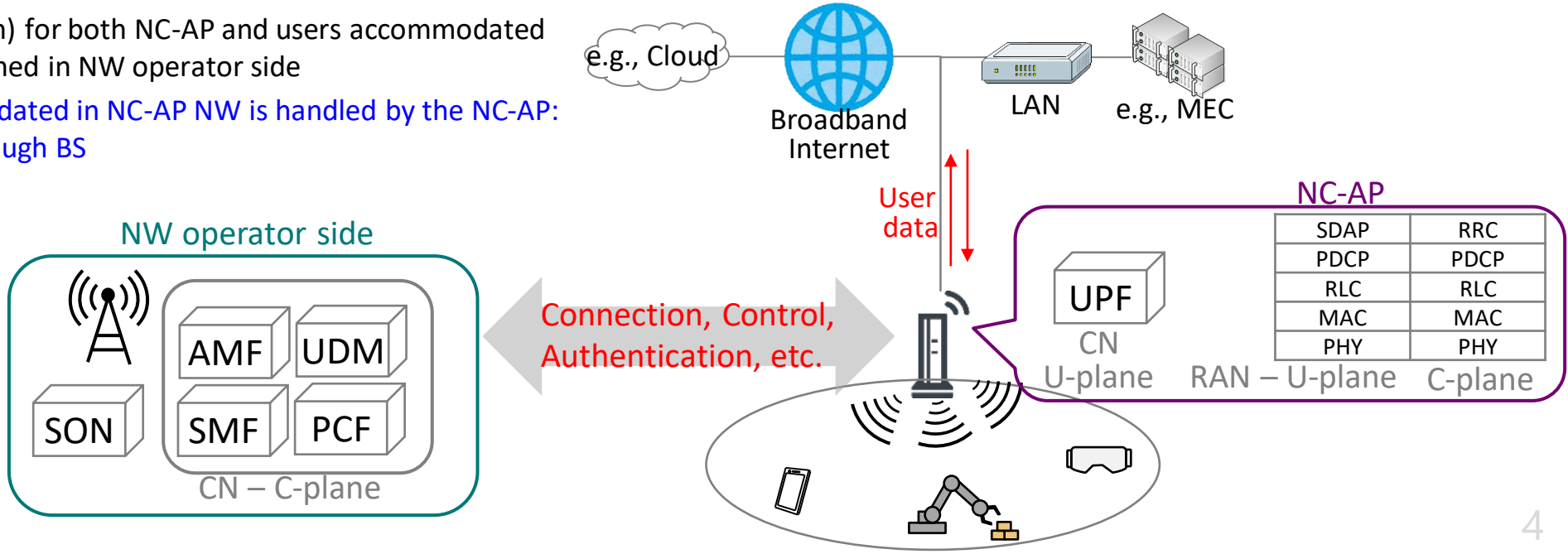

Comparison

	Conventional cellular NW deployments	Wi-Fi AP	Femto/home gNB	NC-AP
Effectiveness/ Efficiency	Not so good	Neutral	Good - FR2 is available without unrealistic-cost of BS installation in conventional manner - Service area is deployed on customer demand	
Promptness	Not so good	Good	Neutral	Good
Frequency utilization	Good	Not so good	Good Licensed spectrum is available = better capacity/throughput/etc. Note: It is assumed that licensed spectrum is available in NC-AP NW due to control by NW operator	
Reliability	Good	Not so good	Good More reliable than Wi-Fi mechanism	
Fault tolerance	Not so good	Good	Not so good	[Good] Even when operator side is down, it may be possible that service area is kept as a kind of emergency mode
Optimality	Good	Not so good	Not so good	Good NW operator collects information in entire network and decides parameters to be used by NC-AP = total optimization

Proposal (Objective)

- Study/decide architecture options
  - e.g., via wireless communication for connection between NW operator and NC-AP
  - e.g., via wired communication for connection between NW operator and NC-AP
- Study SON enhancements for NC-AP NW
  - e.g., define new information reported from NC-AP/UE
  - e.g., define control interface to NC-AP
- Note: FR2 is a main target, but NC-AP concept is not limited to FR2

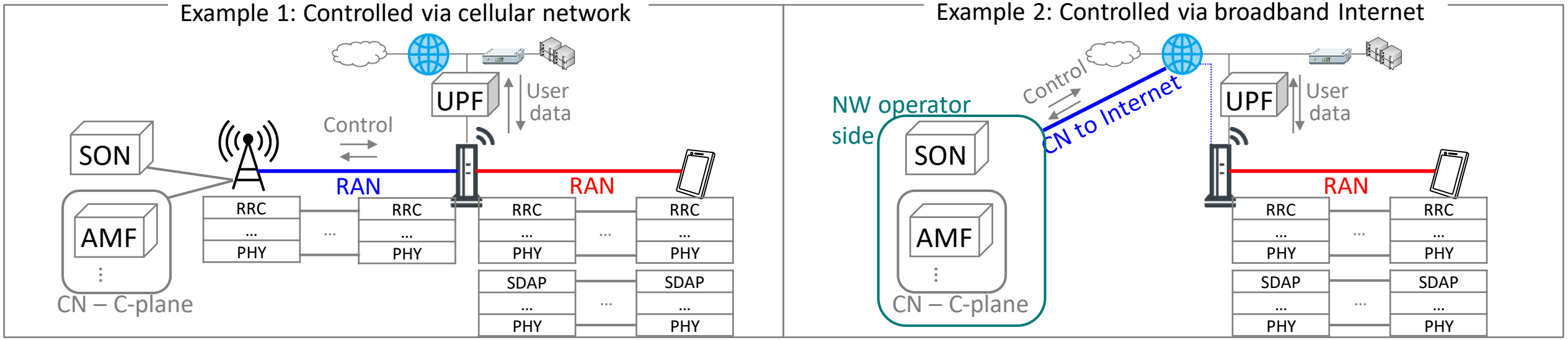

NTT docomo