3GPP RAN Rel-19 Workshop RWS-230177

June 15th-16th, 2023, Taipei, Taiwan

Agenda Item: 5

XR and Metaverse

Qualcomm Incorporated

Qualcomm

Key Objectives

- XR & Metaverse Enhancements (R2, R4 & R1)
  - XR Compatible Measurement Gaps
  - XR Delivery Deadline
  - XR awareness of application level FEC in RAN
  - Enhanced adaptation between NW and UE for XR services
  - Power Saving Enhancements
  - Soft HARQ

Confidential - Qualcomm Technologies, Inc. and/or its affiliated companies - May Contain Trade Secrets

XR Compatible Measurement Gaps

Issue

- Measurement gaps (MGs) used by 5G system for handoff and beam selection procedures
  - Measurements are key for best beam and cell selection during mobility
  - No data transmissions during MG
- Frequent MGs can add latency to XR traffic
  - XR traffic serving is delayed until end of MG
  - With DRX, timers can expire, traffic is further delayed to next DRX cycle

Rel19 Proposal

- Prioritize transmission of XR in CDRX On-time over MG
  - Skip MG procedure with XR traffic in CDRX On-time
  - Perform gap procedure only when in CDRX inactive cycles
- Skipping measurement gaps can affect inter-frequency handover procedures
  - Introduce Semi-Persistent MG: dynamically activate/deactivate MG
  - Introduce aperiodic MG outside of XR traffic

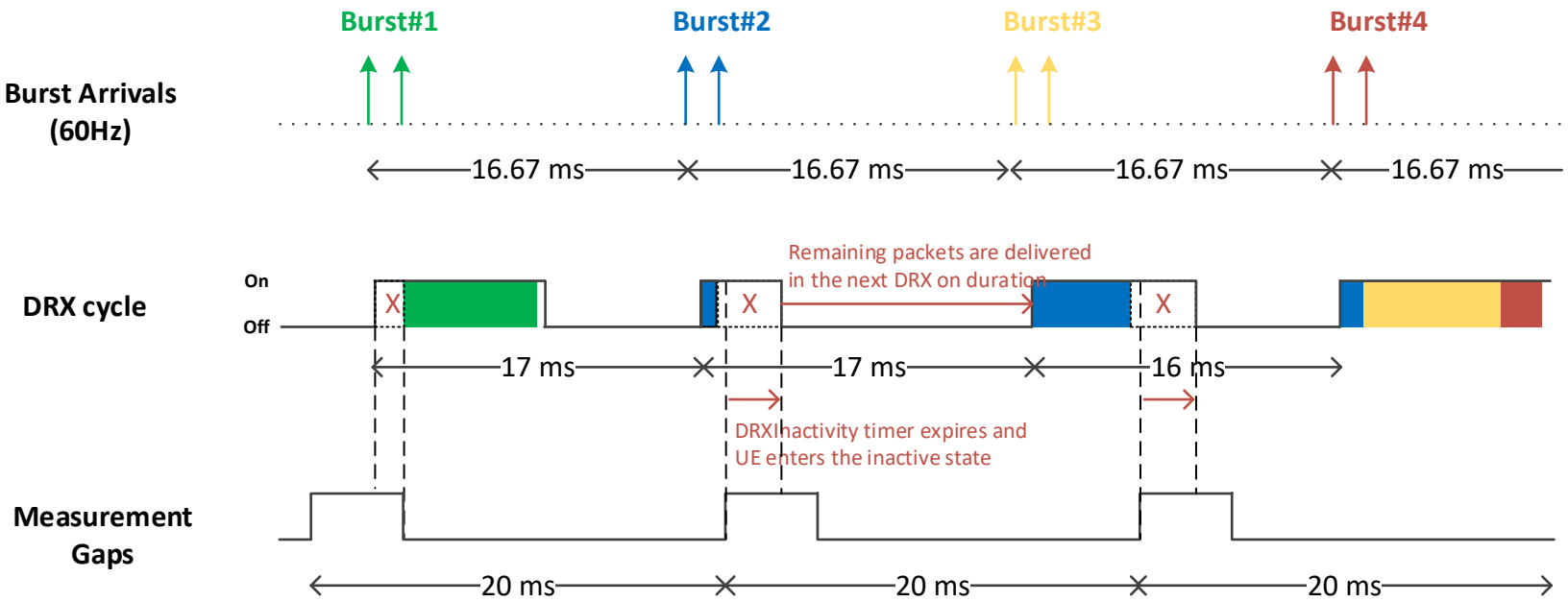

Confidential and Proprietary – Qualcomm Technologies, Inc. and/or its affiliated companies.

XR Delivery Deadline as Latency QoS Metric

Issue

- XR Traffic arrivals can be quasi-periodic
  - Arrivals can be early or late with respect to a nominal arrival time
- XR receiver starts packet processing for display at regular intervals
  - XR video traffic held in a buffer until time (deadline) when processing must start
- XR performance only requires that packets are delivered before deadline
  - Fixed packet delay budget (PDB) from arrival time is less useful
- Introduce PDU-set delivery deadline (PSDD) as an alternative to PDB
  - Additional time to serve PDU-sets improves XR capacity

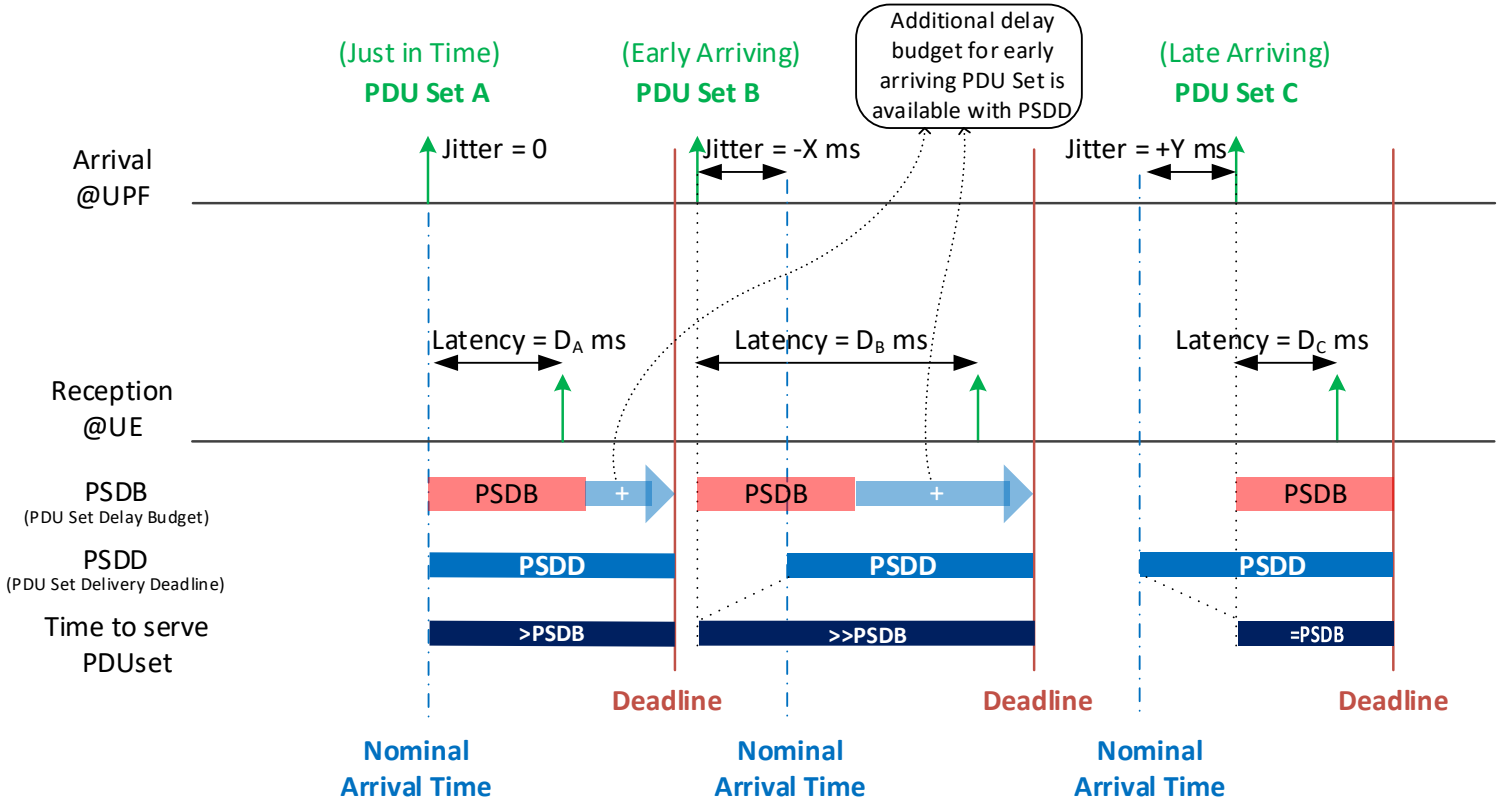

XR Awareness of Application Level FEC in RAN

Background

- XR and Cloud Gaming Applications implement FEC for reliability
  - 5G link can be unreliable
  - Non-3gpp access (e.g., WiFi) can be unreliable
- FEC overhead is set statically without link-awareness
  - Set for worse case (e.g., Can be as high as 30%)
  - Cannot be adapted to radio conditions
  - Consumes 5G capacity when required overhead is much smaller

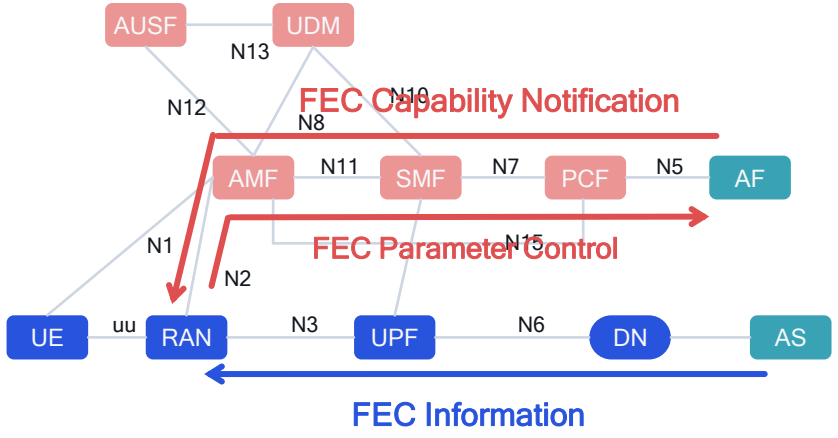

Proposal

- Introduce XR awareness of application-level FEC in RAN
  - Server indicates capability of application-level FEC to RAN (AF → RAN)
    - Supported FEC types and parameters
  - RAN shares feedback on FEC parameters (RAN → AF)
    - FEC enable or disable
    - Recommended redundancy of parity symbols (%)
    - Recommended symbol size (T)
  - Additional metadata in PDU set for FEC information (AS → RAN)
    - FEC Encoding Type (e.g. RaptorQ, RS)
    - Number of source symbols (K)
    - Encoding Symbol Index (ESI)
- RAN stops the transmission when UE receives sufficient packets

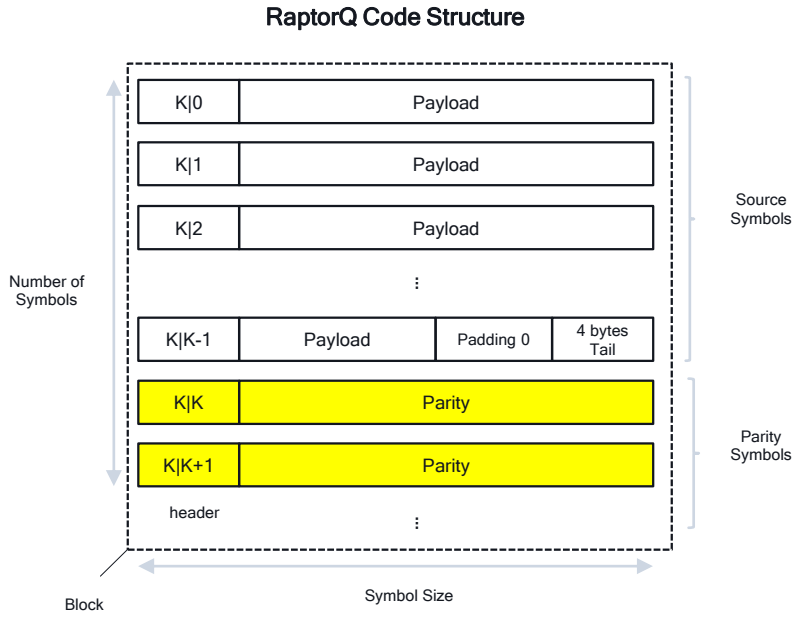

Enhanced adaptation between NW and UE for XR services

- Motivation
  - Many implementations of XR applications can adapt their bit/frame rates in response to variations in the quality of its connections
  - However, currently network (CN & RAN) and application adapt only on their own, e.g.
    - Application adapts its FEC code rate based on measured end-to-end PER
    - Network passively collects traffic statistics and then reconfigures UE's radio resources accordingly
  - Improving this slow and uncoordinated process can help applications become more responsive and thus enable better user experience

- Proposal
  - Rate indication between NW and UE/applications
    - NW can provide available bit rate info to UE/application
    - UE/application can provide preferred bit rate to RAN/CN
      - e.g. triggered by power saving or e2e available BW
  - Pre-configurations for faster adaptation
    - RAN can pre-configure UE with a set of radio resource configurations (e.g. DRX, R18 CGs)
    - CN can pre-configure RAN with a set of QoS profiles for UE
    - Switch b/w configurations in RAN or QoS profiles in CN can be triggered by UE, RAN or CN
  - Timing of adaption
    - Need new protocols for coordinating adaptions by RAN and CN

Power Saving Enhancements

Enhancements for Rel-17 PDCCH skipping:

1. PDCCH Skipping Termination After NACK (if not agreed for Rel-18)
2. Continue PDCCH skipping during CDRX HARQ ReTx Timer: gNB sends PDCCH skipping indication after all ACK and using non-scheduling DCI. The UE continues skipping PDCCH monitoring while HARQ ReTx Timers are running.

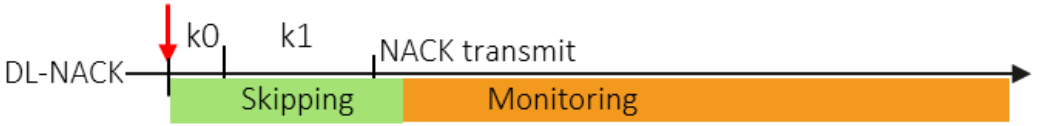

Soft-HARQ: principle and motivation

- **Main idea**
  - On top of today's CSF which is based on CSI-RS, provide A-CSI feedback based on PDSCH decoding statistics to help base station to achieve better link adaptation for URLLC service.

- **Use cases/examples**
  - Use case 1: Derive OLLA more accurately with soft-ACK feedback
    - Traditional OLLA operating based on NACK/ACK ratio
    - Turbo-HARQ allows OLLA operating based on ratio of low_margin_ACK + NACK/high_margin_ACK

  - Use case 2: Point to correct MCS for reTx with soft-NACK feedback

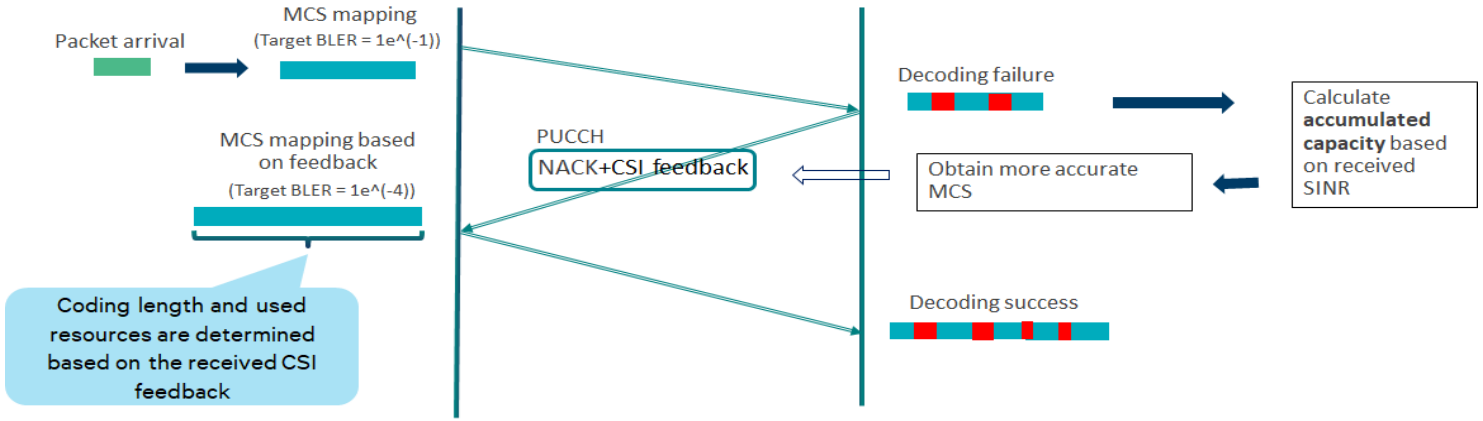

RWS-230183: NR MIMO (proposal on Enhanced LA Coding rate adaptation enhancements)

Qualcomm

Thank you

Follow us on:

For more information, visit us at:

www.qualcomm.com & www.qualcomm.com/blog

All data and information contained in or disclosed by this document is confidential and proprietary information of Qualcomm Technologies, Inc. and/or its affiliated companies and all rights therein are expressly reserved. By accepting this material the recipient agrees that this material and the information contained therein will not be used, copied, reproduced in whole or in part, nor its contents revealed in any manner to others without the express written permission of Qualcomm Technologies, Inc. Nothing in these materials is an offer to sell any of the components or devices referenced herein.

©2018-2021 Qualcomm Technologies, Inc. and/or its affiliated companies. All Rights Reserved.

Qualcomm is a trademark of Qualcomm Incorporated, registered in the United States and other countries. Other products and brand names may be trademarks or registered trademarks of their respective owners.

References in this presentation to “Qualcomm” may mean Qualcomm Incorporated, Qualcomm Technologies, Inc., and/or other subsidiaries or business units within the Qualcomm corporate structure, as applicable. Qualcomm Incorporated includes our licensing business, QTL, and the vast majority of our patent portfolio. Qualcomm Technologies, Inc., a subsidiary of Qualcomm Incorporated, operates, along with its subsidiaries, substantially all of our engineering, research and development functions, and substantially all of our products and services businesses, including our QCT semiconductor business.