3GPP TSG RAN Rel-19 Workshop
Taipei, Taiwan – June 15th – 16th, 2023

RWS-230113
Agenda Item 5

[RAN1 led] System Energy Efficiency Enhancement for NR

[WI] Low-Power NR

MediaTek Inc.

Motivation

Low-energy design for both UE and Base Station

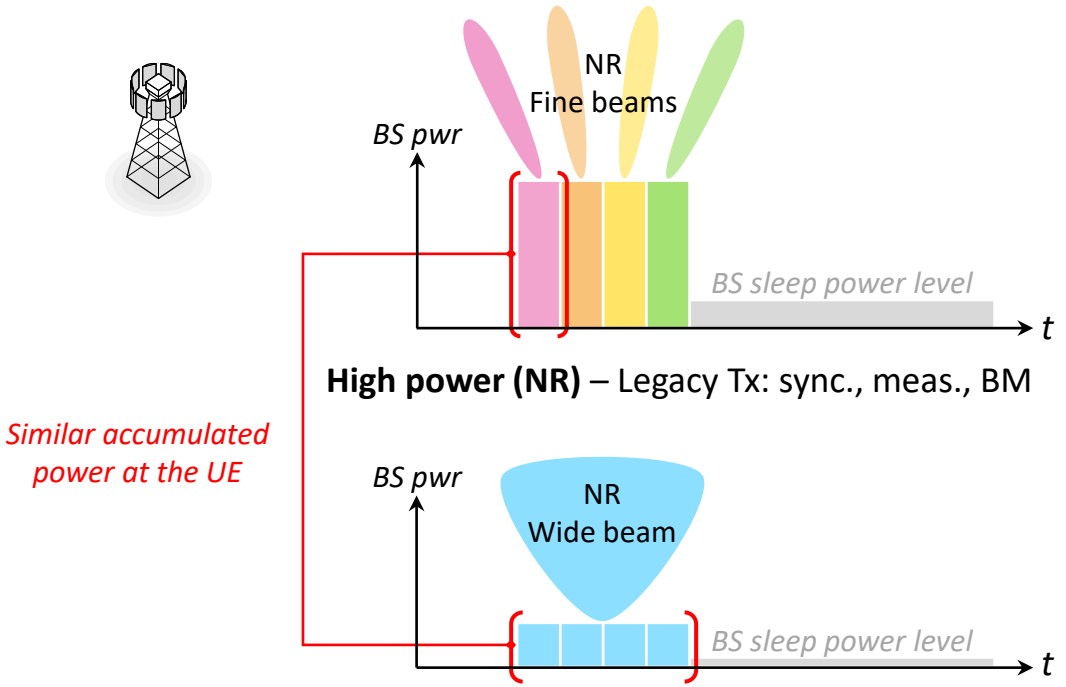

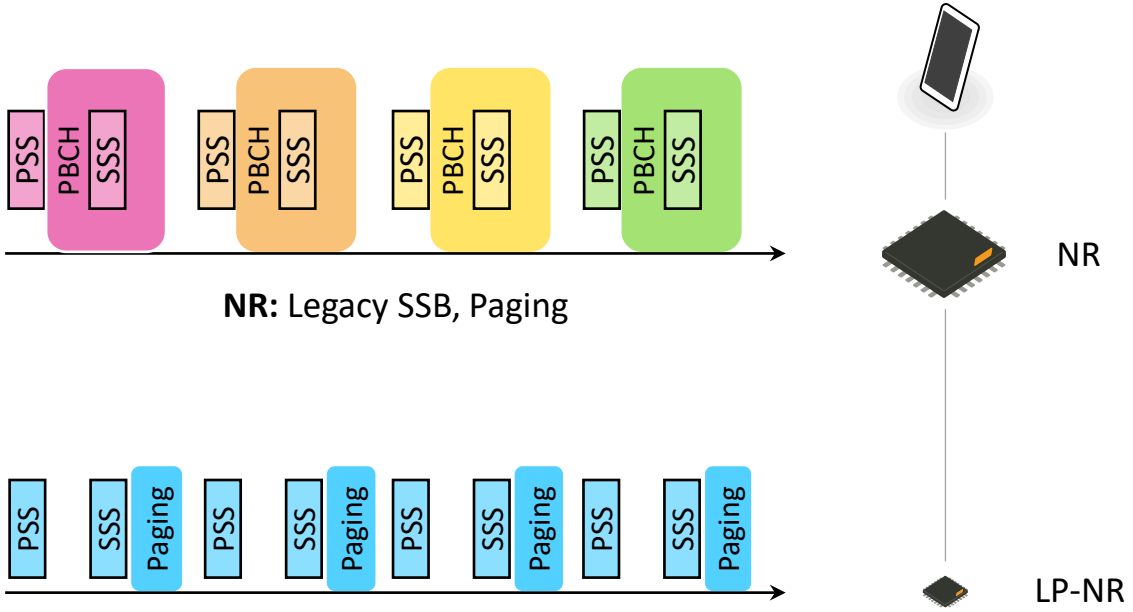

LP-NR @BS: Reduced #antenna for SSB and paging ***saves BS power***

LP-NR @UE: Accumulating all TX occasions ***maintains coverage***

LP-NR @BS provides PSS, SSS and OOK indication

LP-NR @UE allows both more frequent signal reception/processing and reduced power consumption

Proposal
Detailed functional design aspects and performance benefits

- **Low-power SSB/Paging/WUS:** DL Tx and Rx by Low-power radio for idle and connected mode (BS+UE):
  - Wide beam transmissions (no beam-sweeping)
  - Coverage compensation via (existing) repetitions and UE accumulation
  - Legacy SSB Tx cycle adapted and assists LP-SSB for e.g. connection establishment and beam management
  - Low-power Paging design reusing R17 PEI sub-grouping, avoiding core network impact
  - Connected DRX-less operation with LP-WUS to reduce scheduling latency
  - [Serving and neighbour cell] RRM measurement offloading to Low-power Radio
  - Possible multiplexing of low-power signals into single structure, reuse existing PSS/SSS for LP-SSB

- System energy efficiency benefits
  - Idle scenario without data traffic
    - BS energy saving gain >55%, by virtue of reducing active #antenna to 1/4
    - UE power saving gain >30%, by virtue of measurement offloading and low-power paging monitoring by **LP-NR**
      - NOTE: 1% UE paging rate assumed
        Gain >70% for UE paging rate of 0.1%
  - Connected scenario with data traffic
    - DRX-less operation and **LP-NR**-based wake-up for XR services: >20% UE power saving and >10% packet latency reduction
    - Measurement gaps reduction, by virtue of measurement offloading to **LP-NR**, for XR services:
      - >100% capacity gain (R1-2212254; also captured in TR 38.835)
      - NOTE: Measurement gaps only configured for cell-edge UEs

Proposal

SA/CT Dependency: No

Enable NR low-power radio layer (**LP-NR**) for improving energy efficiency of both BS and UE

- Specify low-power paging indication design for idle/inactive scenario [RAN1]
  - OOK indication to accommodate UE low-power radio (LP-NR), based on NR signal/channel
- Specify low-power wake-up indication design for connected scenario [RAN1]
  - OOK indication to accommodate UE LP-NR, based on NR signal/channel
  - Necessary enhancement for reducing scheduling latency
- Study and specify adaptation of legacy SSB transmission, considering impact to L1 and L3 measurements [RAN1]
- Specify necessary paging procedure utilizing LP-NR [RAN2]
  - No CN impact by reusing R17 paging subgrouping design
- Specify support of low-power SSB transmission [RAN4]
  - Accumulated metrics for L3 measurements
- Specify measurement offloading to LP-NR radio layer based on NR synchronization signal(s) [RAN4]
  - Mechanism and requirement(s) taking into account limited capability of LP-NR radio layer

Expected TU

	2024												2025 [Calendar TBC at the time of writing]												2026		
	Q1			Q2			Q3			Q4			Q1			Q2			Q3			Q4			Q1		
	Jan	Feb	Mar	Apr	May	Jun	Jul	Aug	Sep	Oct	Nov	Dec	Jan	Feb	Mar	Apr	May	Jun	Jul	Aug	Sep	Oct	Nov	Dec	Jan	Feb	Mar
RAN			**103**			**104**			**105**			**106**			**107**			**108**			**109**			**110**			**111**
R1	115b	116		116b	117			118		118b	119		119b	120		120b	121			122		122b	123		123b	124	
R2	124b	125		125b	126			127		127b	128		128b	129		129b	130			131		131b	132				
R3	122b	123		123b	124			125		125b	126		126b	127		127b	128			129		129b	130				
R4	109b	110		110b	111			112		112b	113		113b	114		114b	115			116		116b	117		117b	118	
R1		1.0		1.0	1.0			1.0		1.0	1.0			1.0		1.0	1.0										
R2				0.5	0.5			0.5		0.5	0.5			0.5		0.5	0.5			0.5							
R3																											
R4 RD				0.75	0.75			0.75		0.75	0.75			0.75		0.75	0.75			0.75							
R4 RF																											

RAN4 Core

RAN4 Perf

Study TU

Feature TU

Thank you!

Backup material
Low-Power Radio (LR) for UE

- **Feasibility:** Generalizing WIFI OOK receiver architecture (with I+Q and matching PSS/SSS) can achieve low power consumption while exploiting NR synchronization signals
  - PSS/SSS for sync (at duty-cycle) and OOK for wake-up (continuous monitoring)
  - OOK indication is robust to accommodate low quality VCO and simple for continuous monitoring

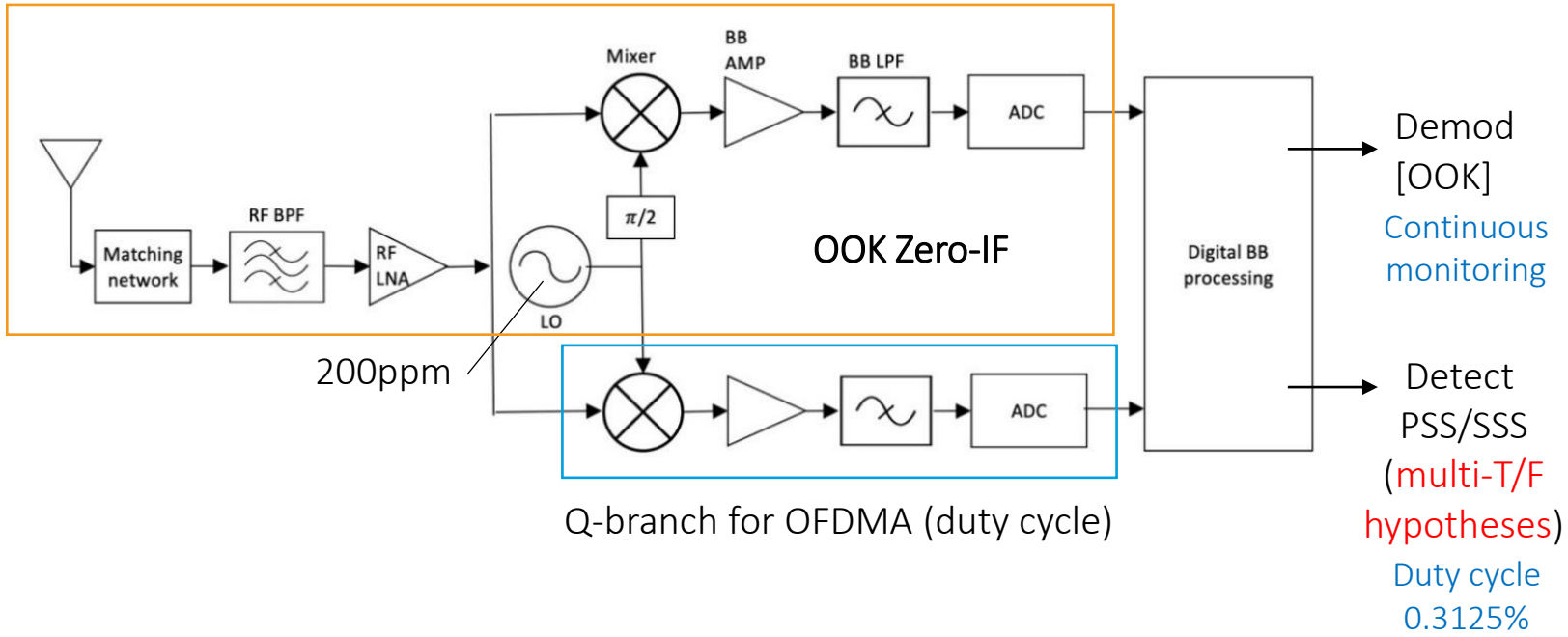

WUS modulation	OOK
Architecture type	Zero-IF/OFDMA
Noise figure	14
ADC	4-bit/3.84MHz
VCO	200ppm (initial) [0~10]ppm (sync)
DBB	Demod [OOK] Detect PSS/SSS (Duty cycle)

Appendix
WIFI Low-Power Wake-Up Radio (LP-WUR)

- LP-WUR with power consumption <1mW is possible based on the IEEE 802.11ba
  - OOK with non-coherent detection
  - Low requirements on RF and DBB

- Power consumption: 606uW (no IQ) [1]
  - RF/analog: Noise figure: 14dB (NR FR1: 9dB)
  - Low accuracy VCO: WIFI considers 200ppm initial CFO
  - Low complexity DBB: [4-bit] A/D + simple seq. det.

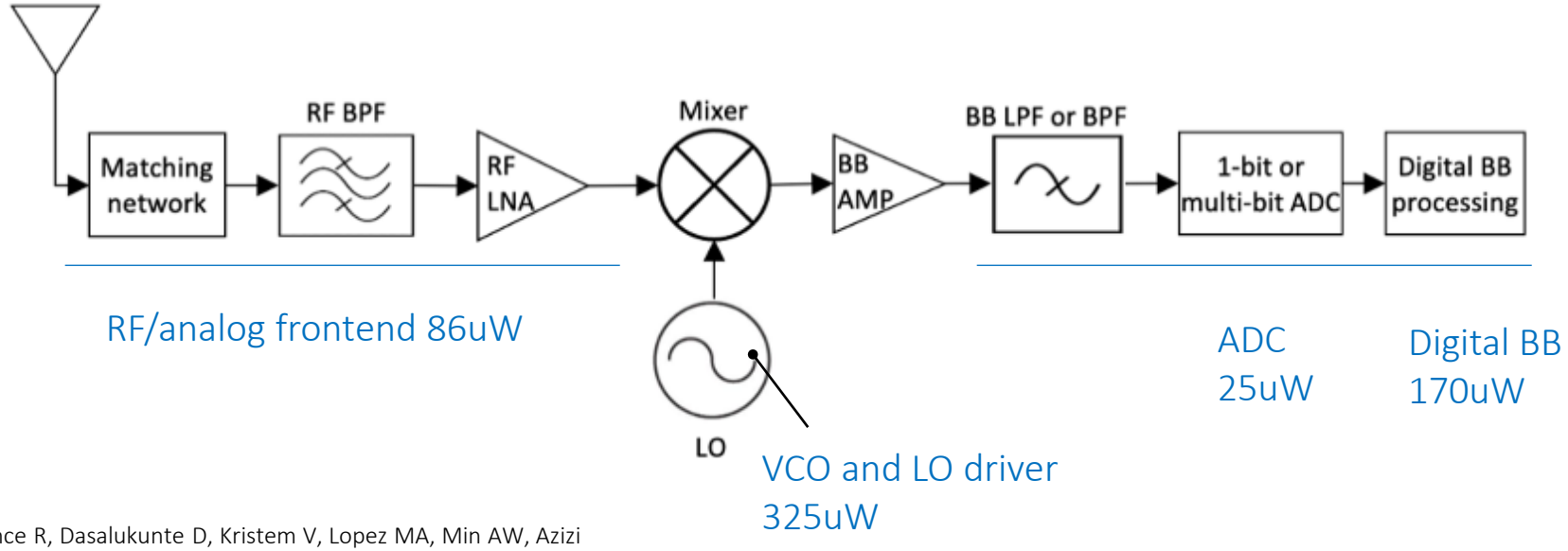

[1] Liu R, KT AB, Dorrance R, Dasalukunte D, Kristem V, Lopez MA, Min AW, Azizi S, Park M, Carlton BR. An 802.11 ba-based wake-up radio receiver with Wi-Fi transceiver integration. IEEE Journal of Solid-State Circuits. 2019 Dec 24