NTN: UE-to-Satellite-to-UE communications

Options and LI implications

Nagaraja (Nag) Rao; Nokia

 © 2024 Nokia | Drawn by N. Rao

Background (IMS media)

© 2024 Nokia
Drawn by N. Rao

From TR 33.929-1: An example of IMS media interception at IMS-AGW

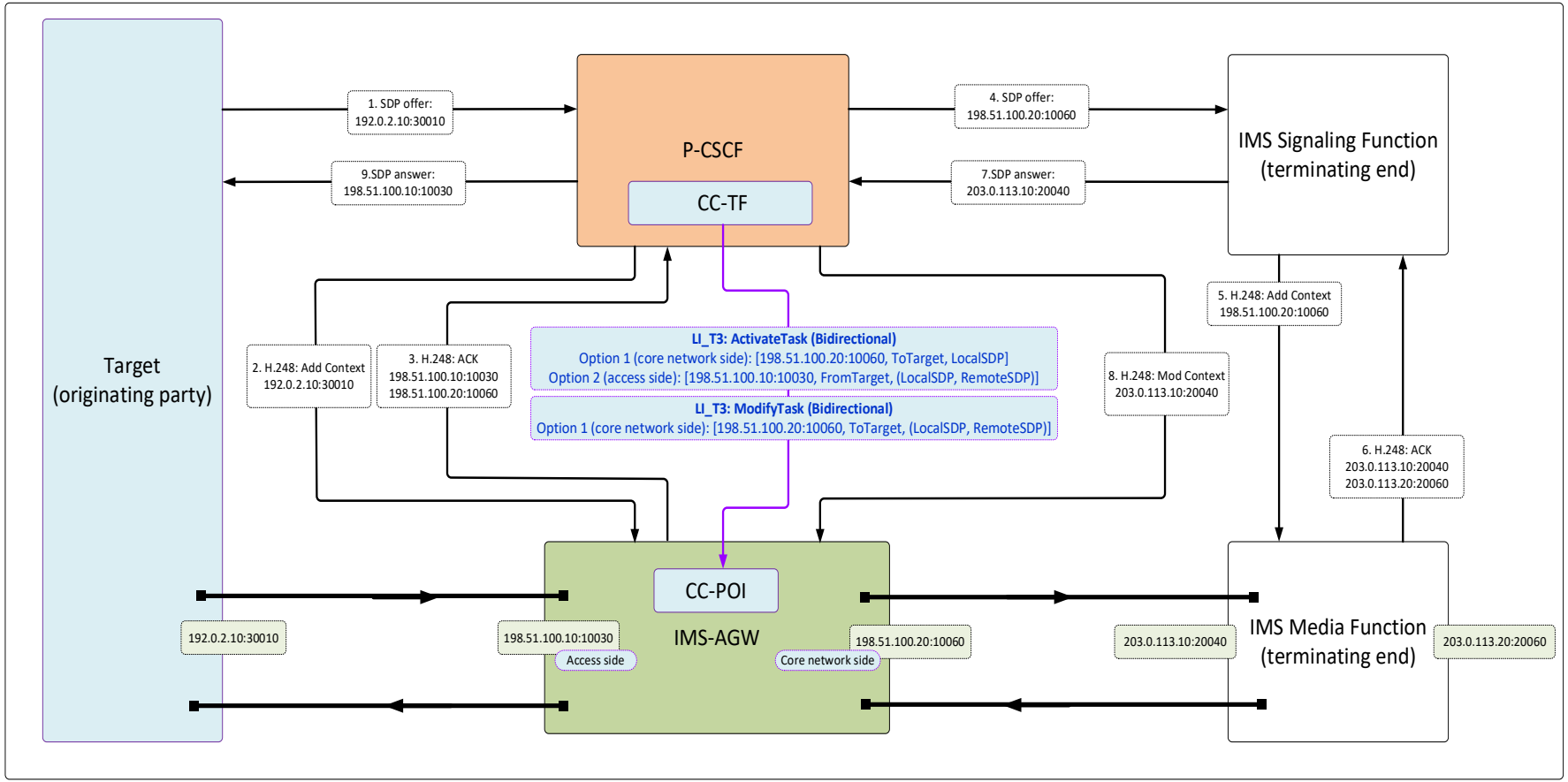

© 2024 Nokia
Drawn by N. Rao

IMS packets in the 5GS (QoS Flows)

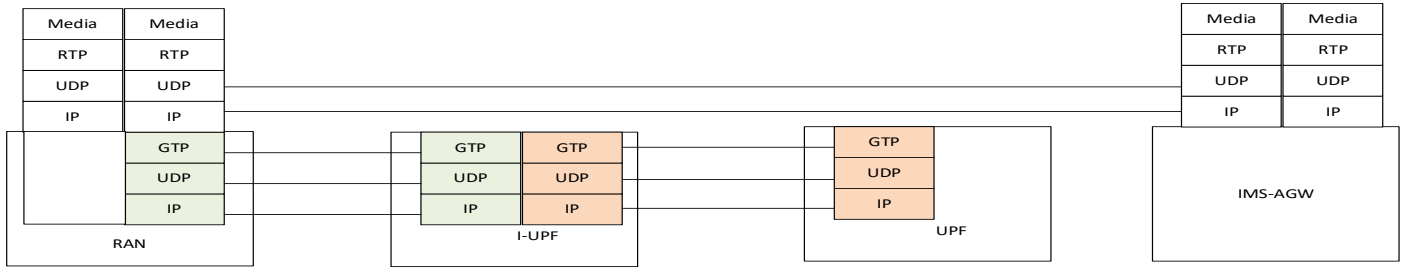

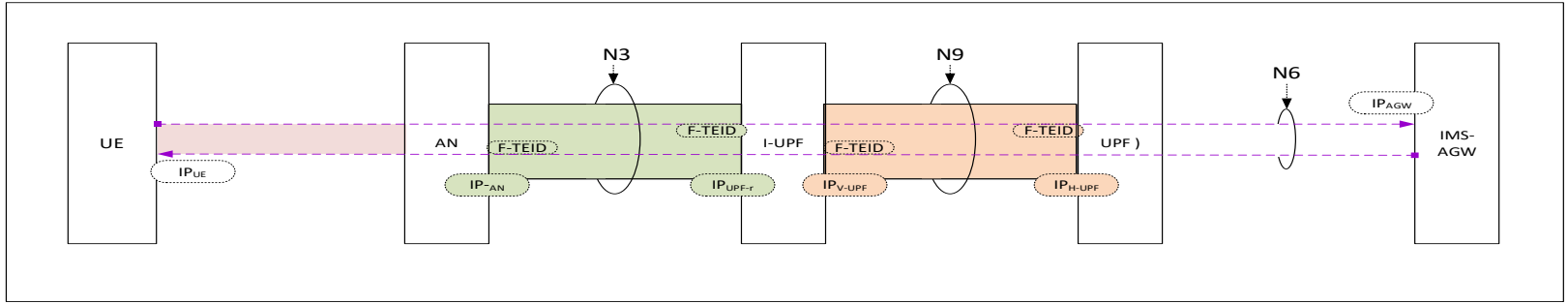

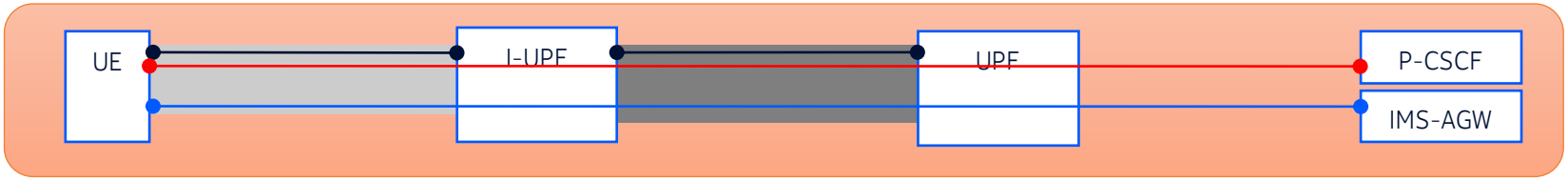

© 2024 Nokia
Drawn by N. Rao

NTN case of UE-to-Satellite-to-UE communication (IMS session)

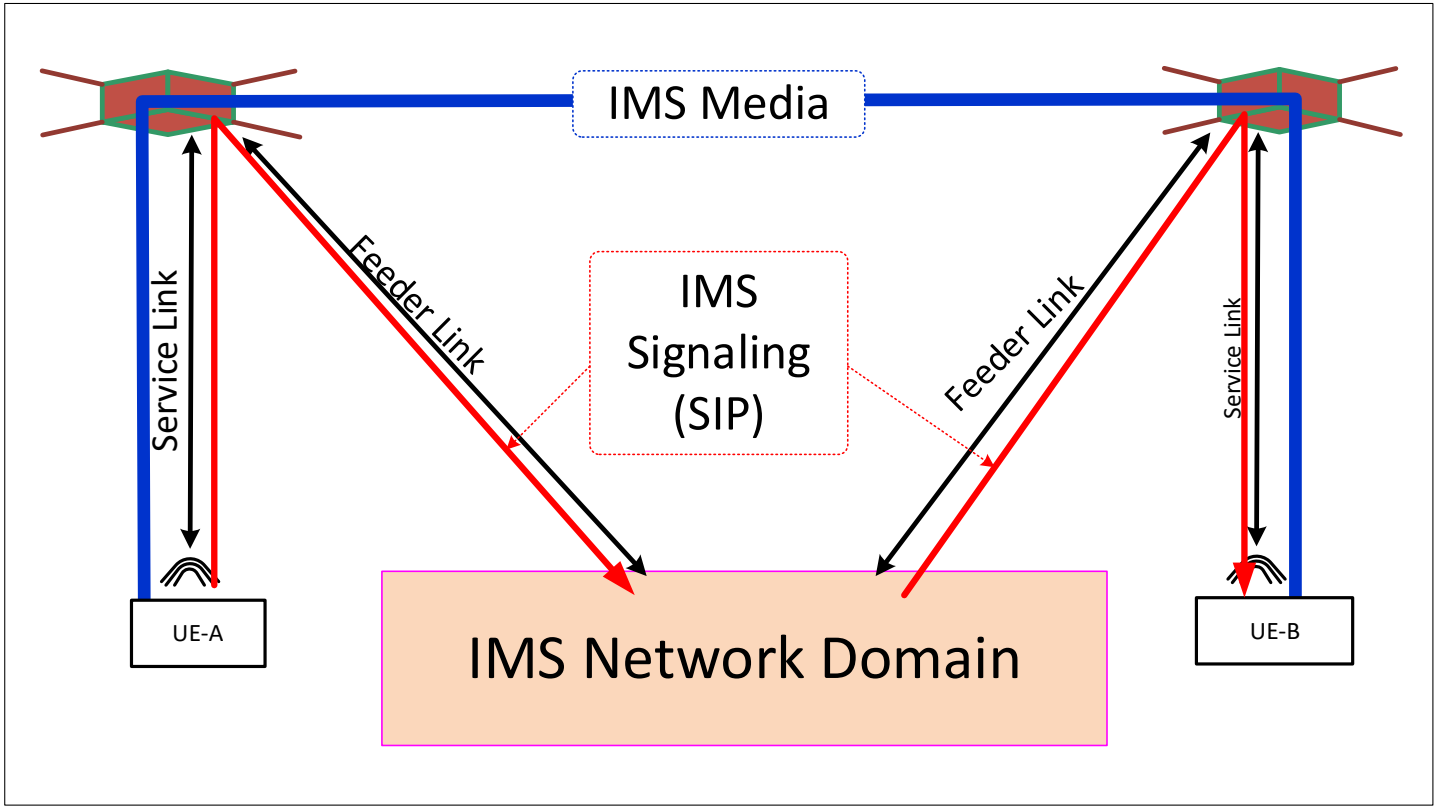

© 2024 Nokia
Drawn by N. Rao

Realization options

© 2024 Nokia
Drawn by N. Rao

Option 1
(without the IMS-AGW)

© 2024 Nokia
Drawn by N. Rao

Media path via I-UPFs

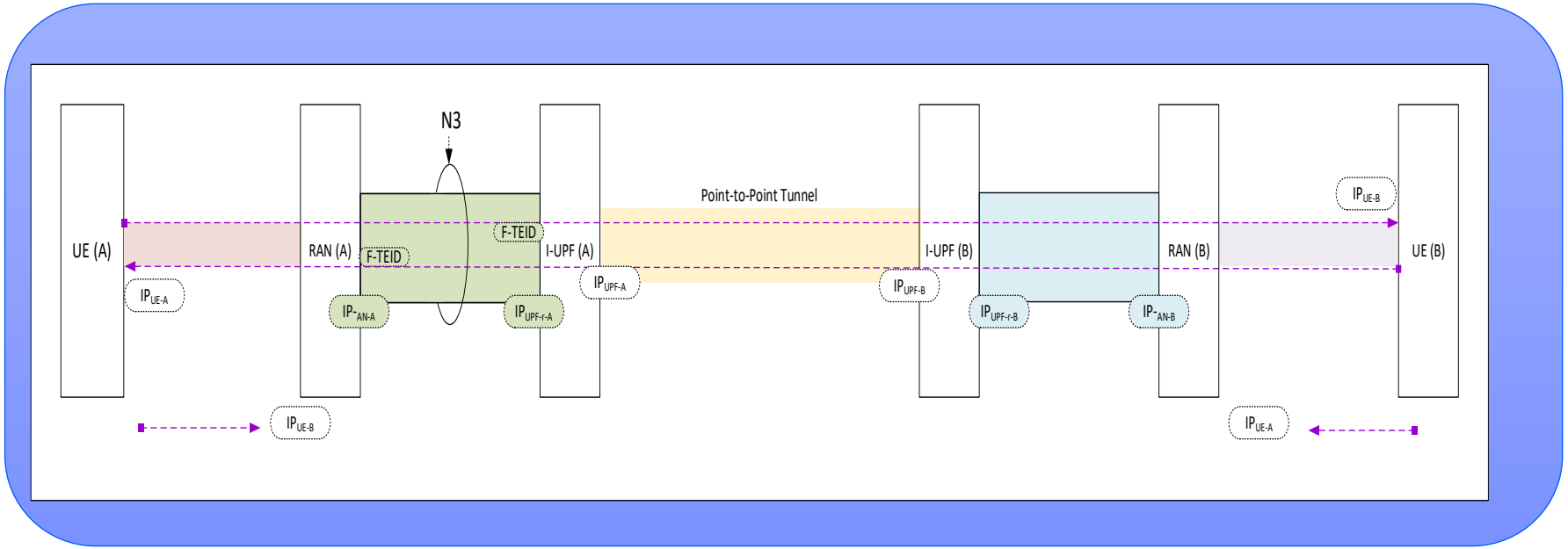

© 2024 Nokia
Drawn by N. Rao

Before the SDP offer and answer

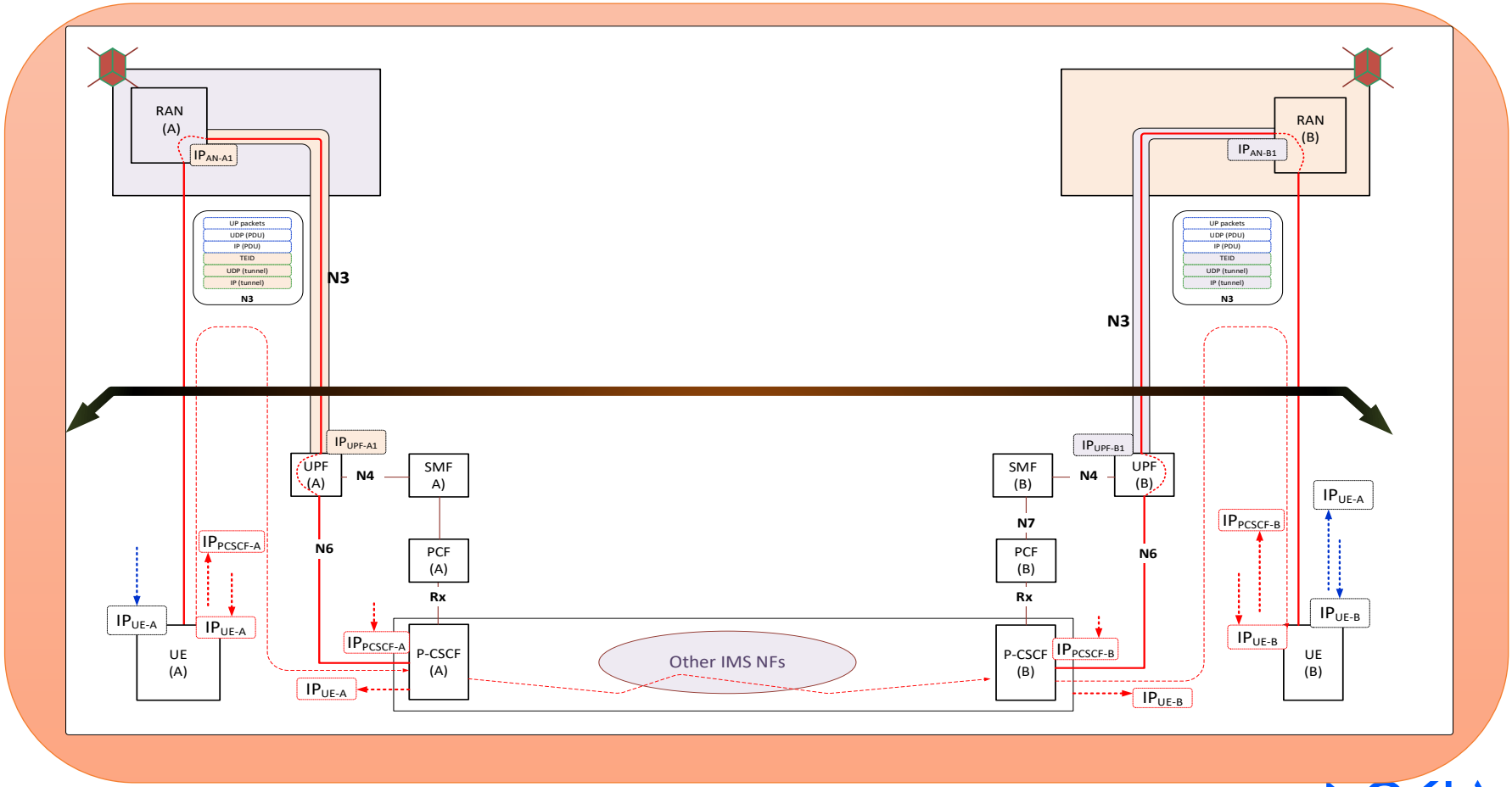

© 2024 Nokia
Drawn by N. Rao

After the SDP offer and answer

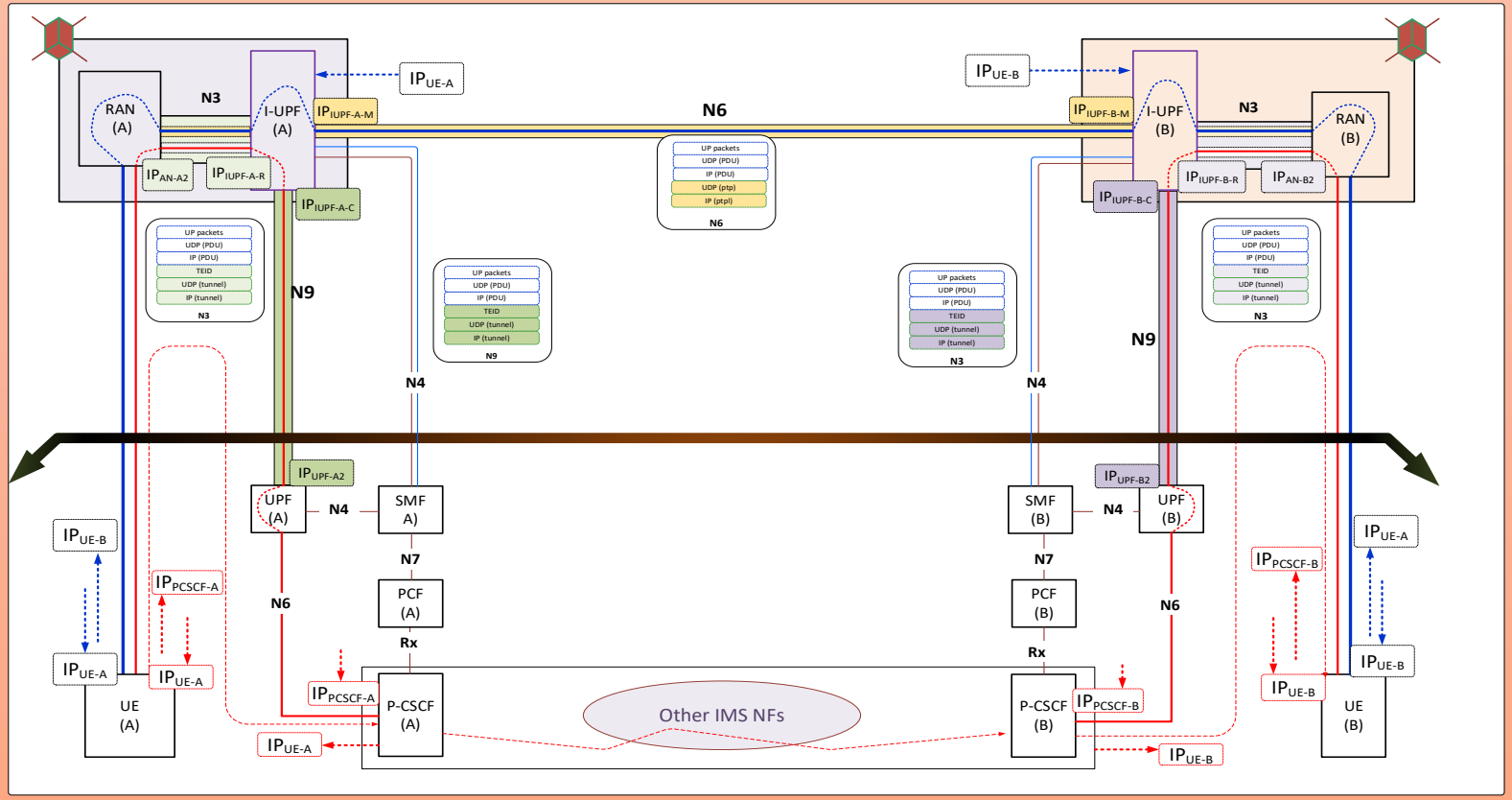

© 2024 Nokia
Drawn by N. Rao

After the A-side Satellite to Satellite handover

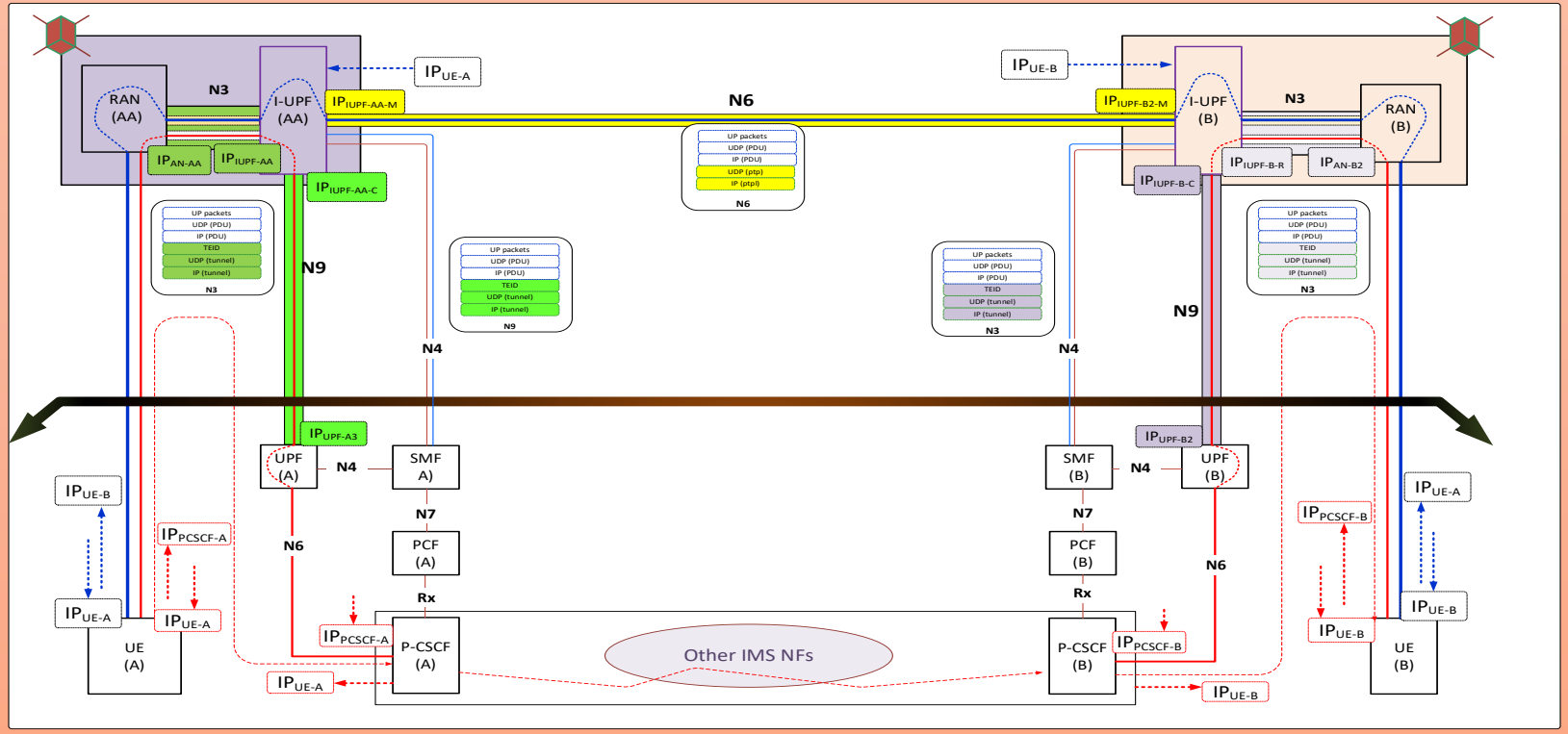

© 2024 Nokia
Drawn by N. Rao

Option 2
(with the IMS-AGW)

 © 2024 Nokia | Drawn by N. Rao

Media path via IMS-AGWs

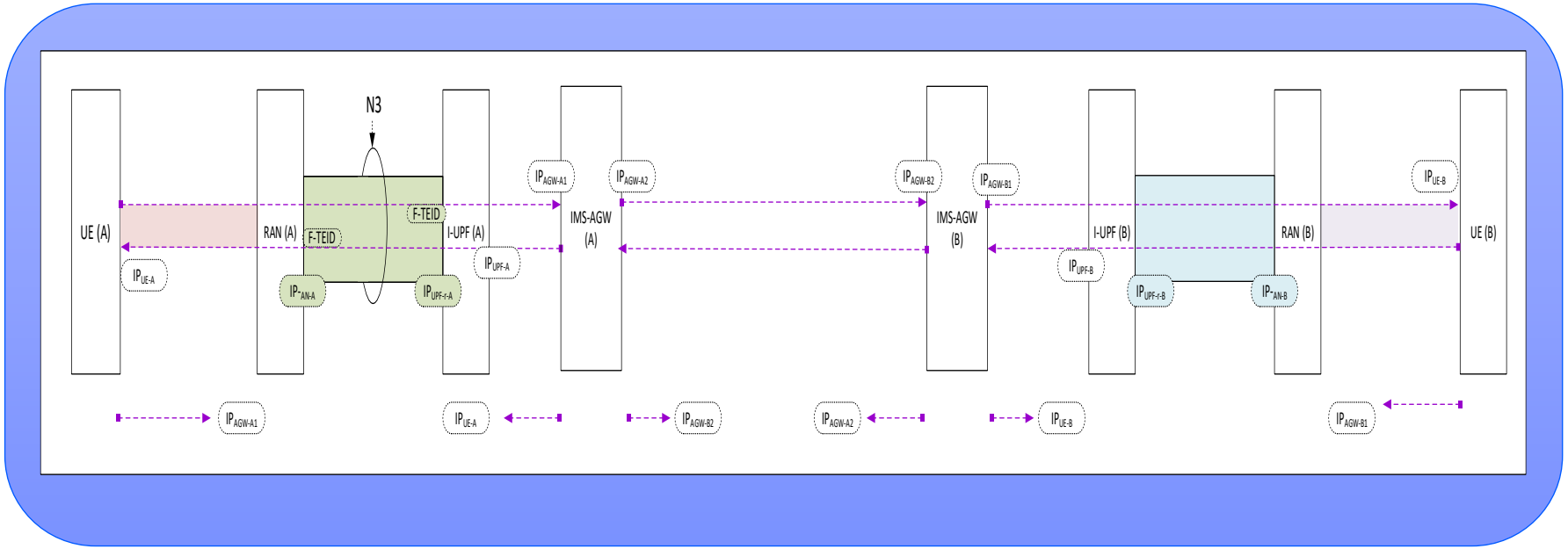

 © 2024 Nokia | Drawn by N. Rao

Before the SDP offer and answer

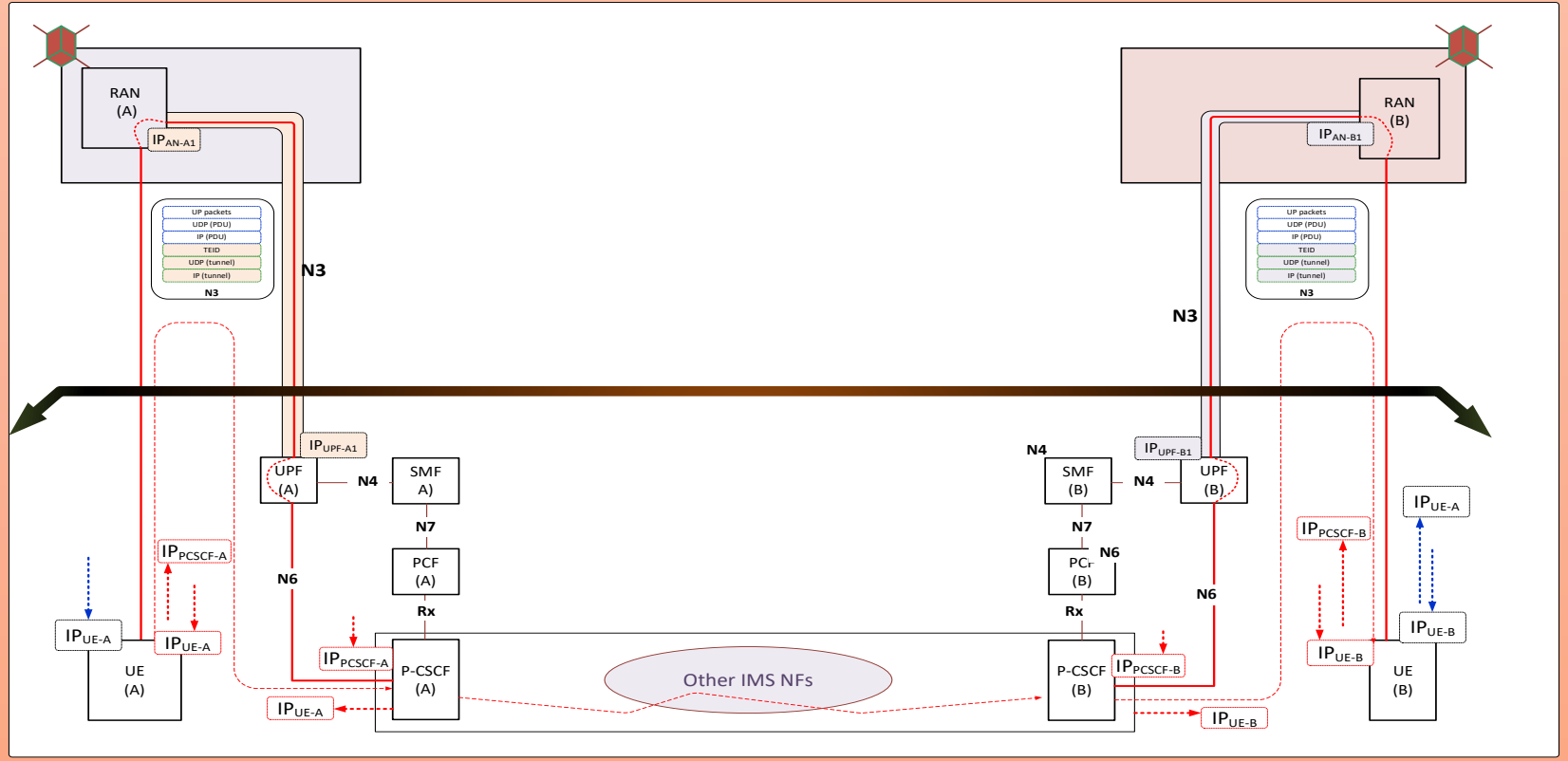

 © 2024 Nokia | Drawn by N. Rao

After the SDP offer and answer

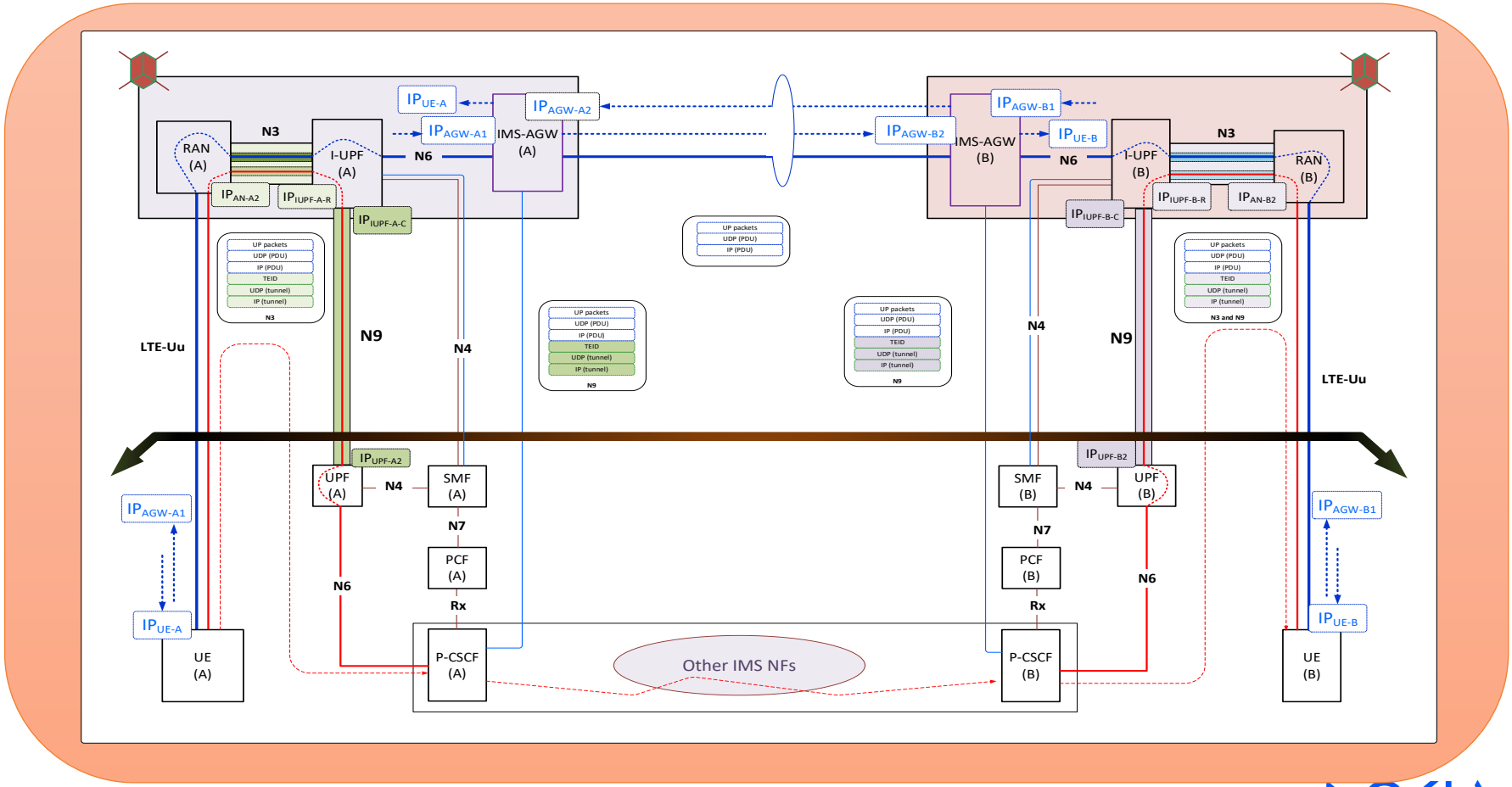

© 2024 Nokia
Drawn by N. Rao

After the A-side Satellite to Satellite handover

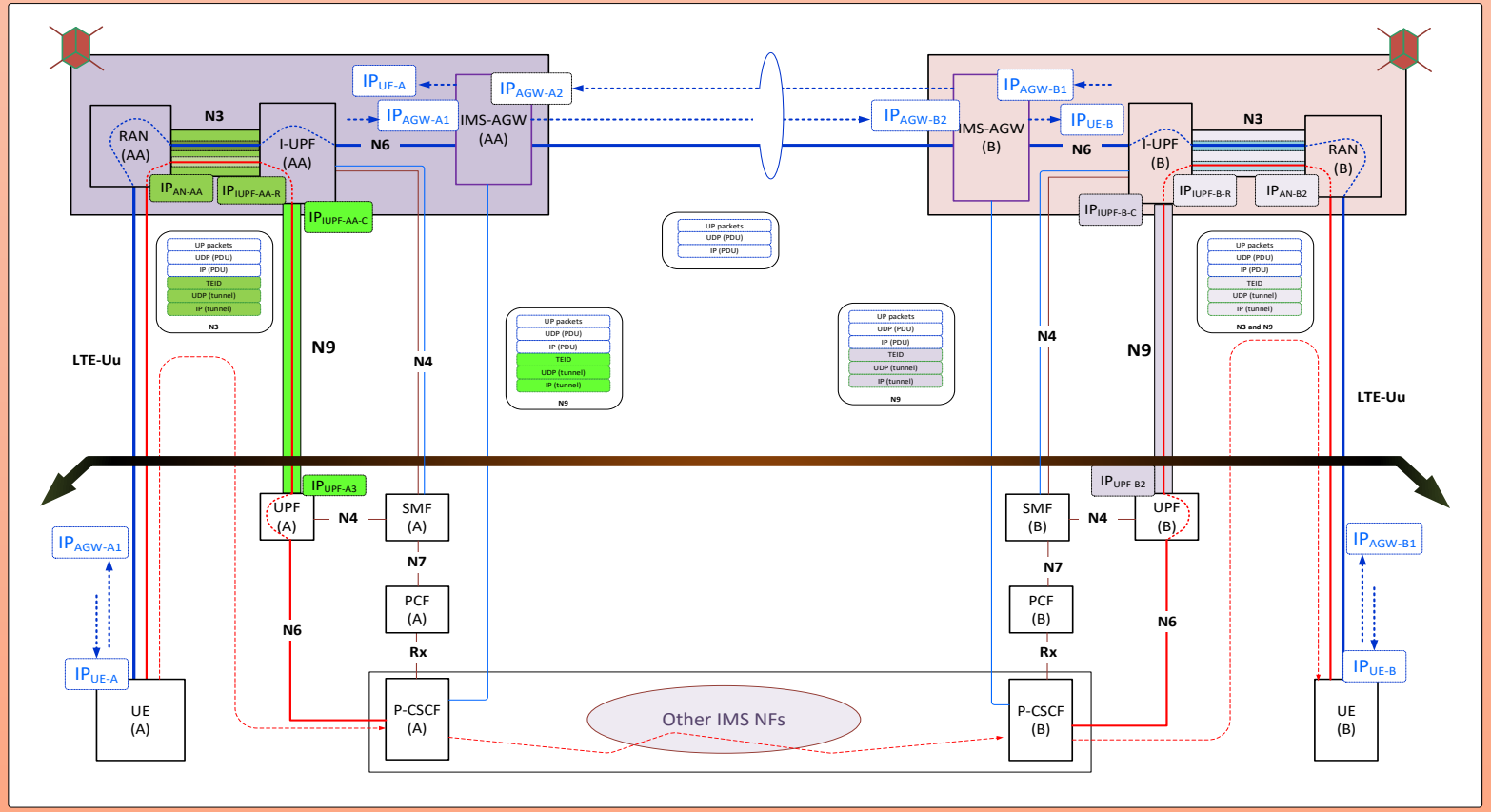

© 2024 Nokia
Drawn by N. Rao

LI implications

© 2024 Nokia
Drawn by N. Rao

Option 1
(without the IMS-AGW)

 © 2024 Nokia | Drawn by N. Rao

Before the SDP offer and answer

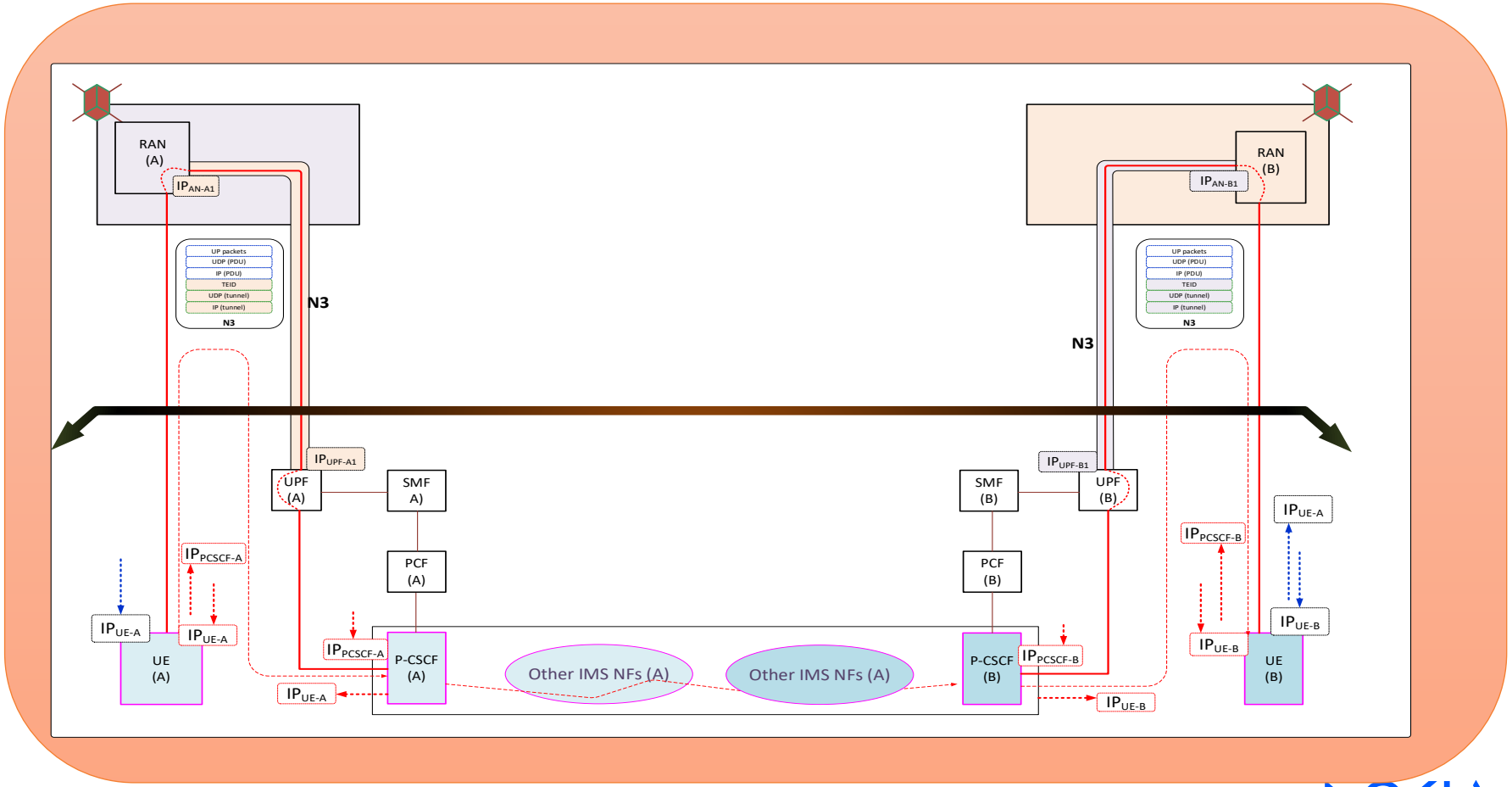

 © 2024 Nokia | Drawn by N. Rao

After the SDP offer and answer

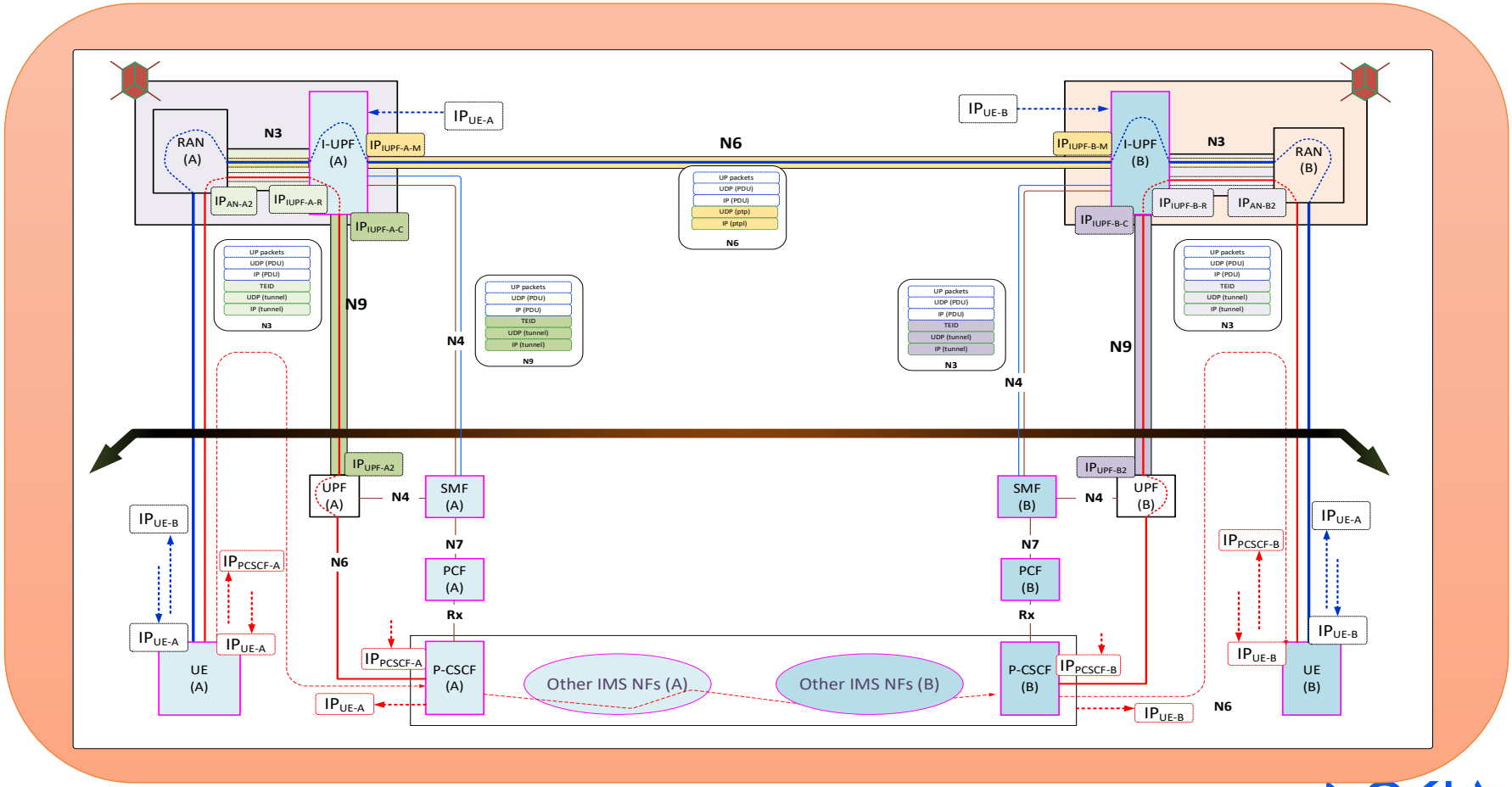

 © 2024 Nokia | Drawn by N. Rao

After the A-side Satellite to Satellite handover

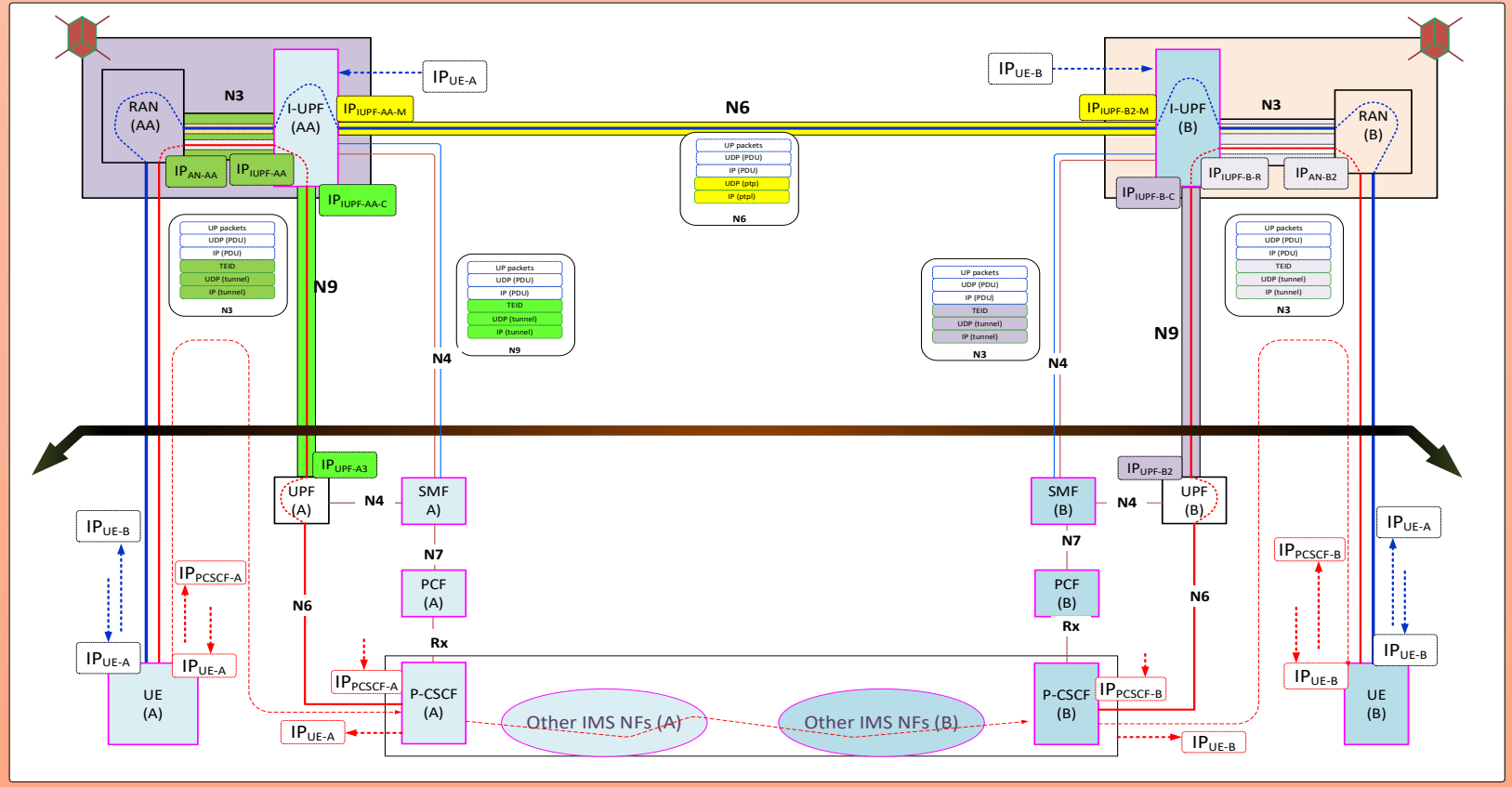

© 2024 Nokia
Drawn by N. Rao

Option 2
(with the IMS-AGW)

 © 2024 Nokia | Drawn by N. Rao

Before the SDP offer and answer

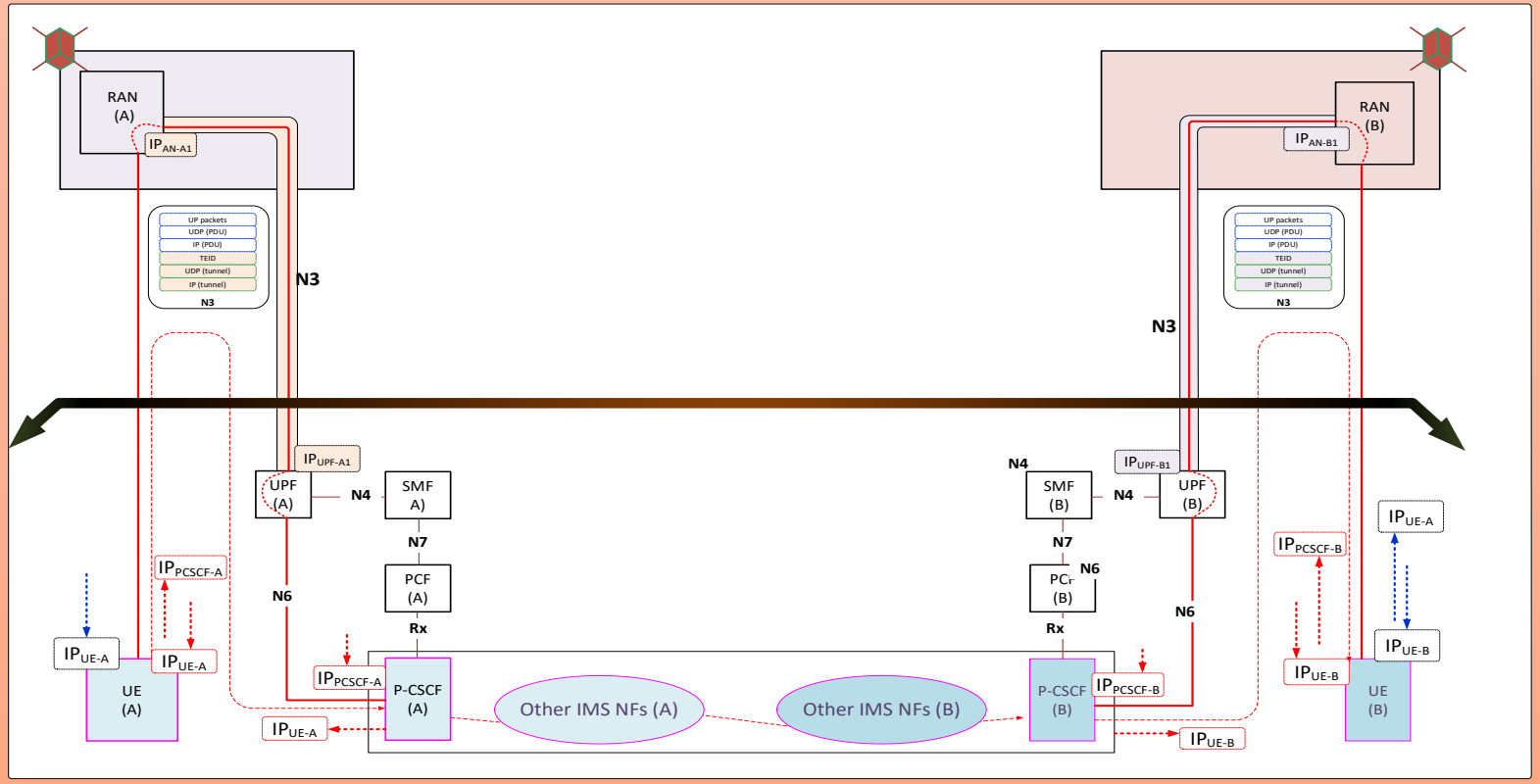

© 2024 Nokia
Drawn by N. Rao

After the SDP offer and answer

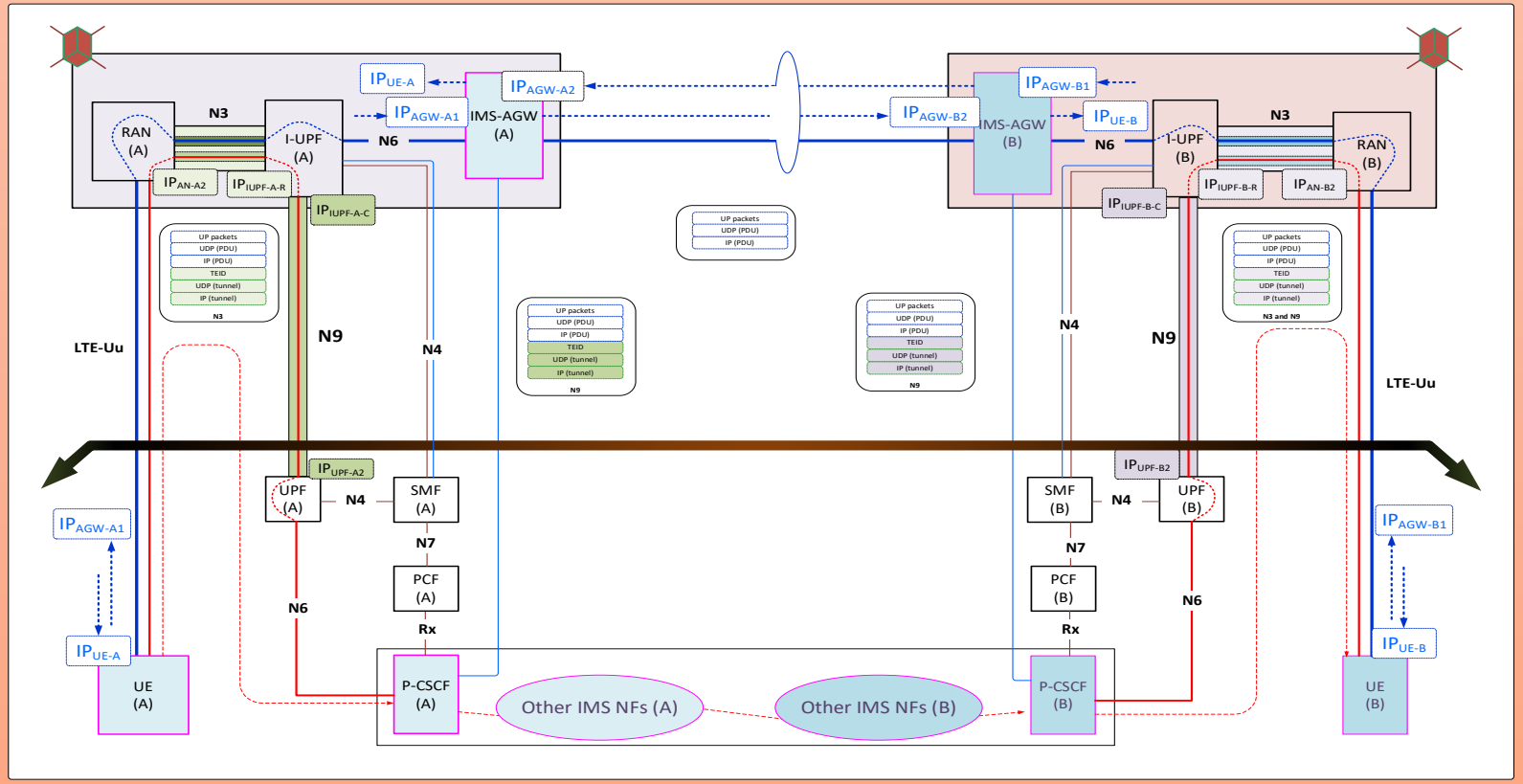

 © 2024 Nokia | Drawn by N. Rao

After the A-side Satellite to Satellite handover

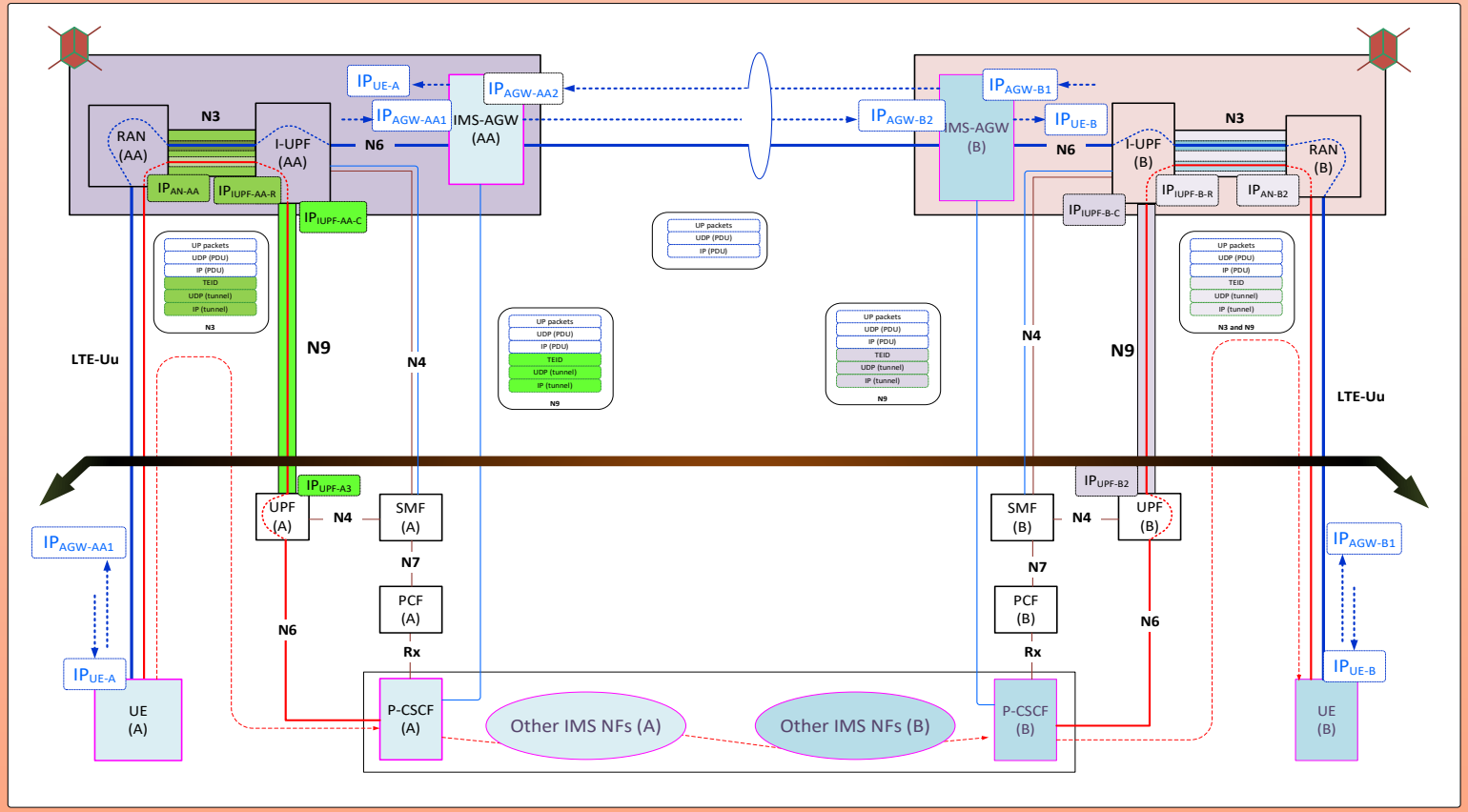

© 2024 Nokia
Drawn by N. Rao

Summary and conclusion

 © 2024 Nokia | Drawn by N. Rao

Option 1

- Media interception will have to happen at the I-UPF.
- Currently, an UPF-based CC-POI is not supported for IMS LI.
- Point-to-point tunnel between two I-UPFs (a non-LI function)
- Change of I-UPF mid-session can be a challenge (even for non-LI).

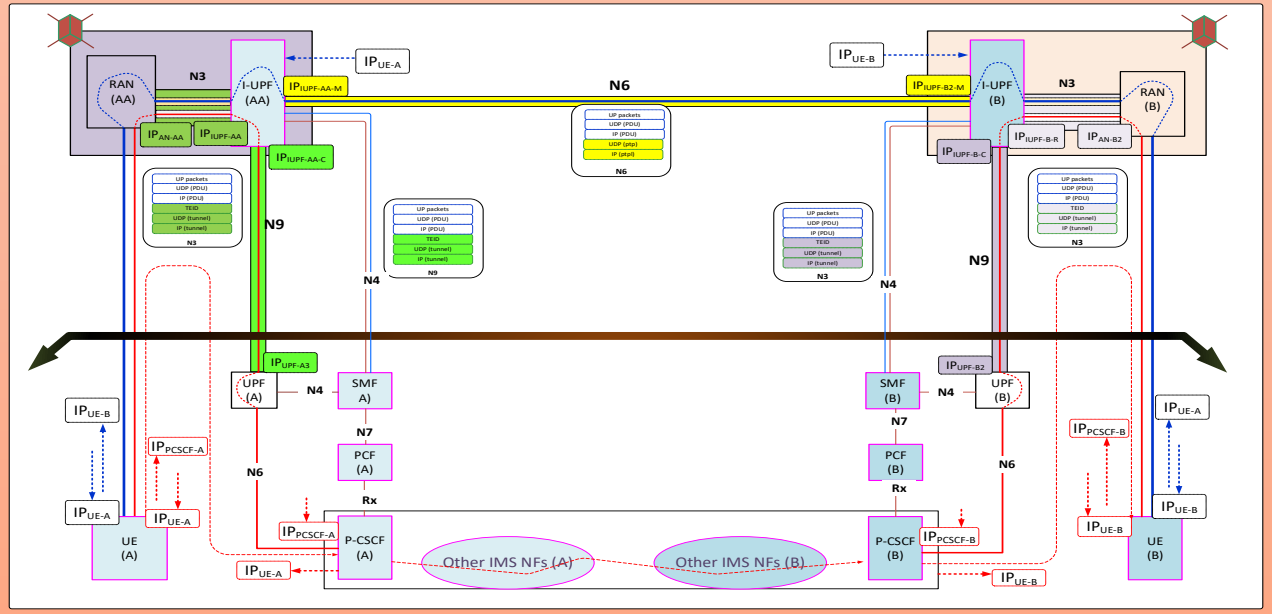

© 2024 Nokia
Drawn by N. Rao

Option 2

- Media interception is at the IMS-AGW.
- Currently, this approach is supported in IMS LI.
- Change of IMS-AGW mid-session is not considered in IMS LI.

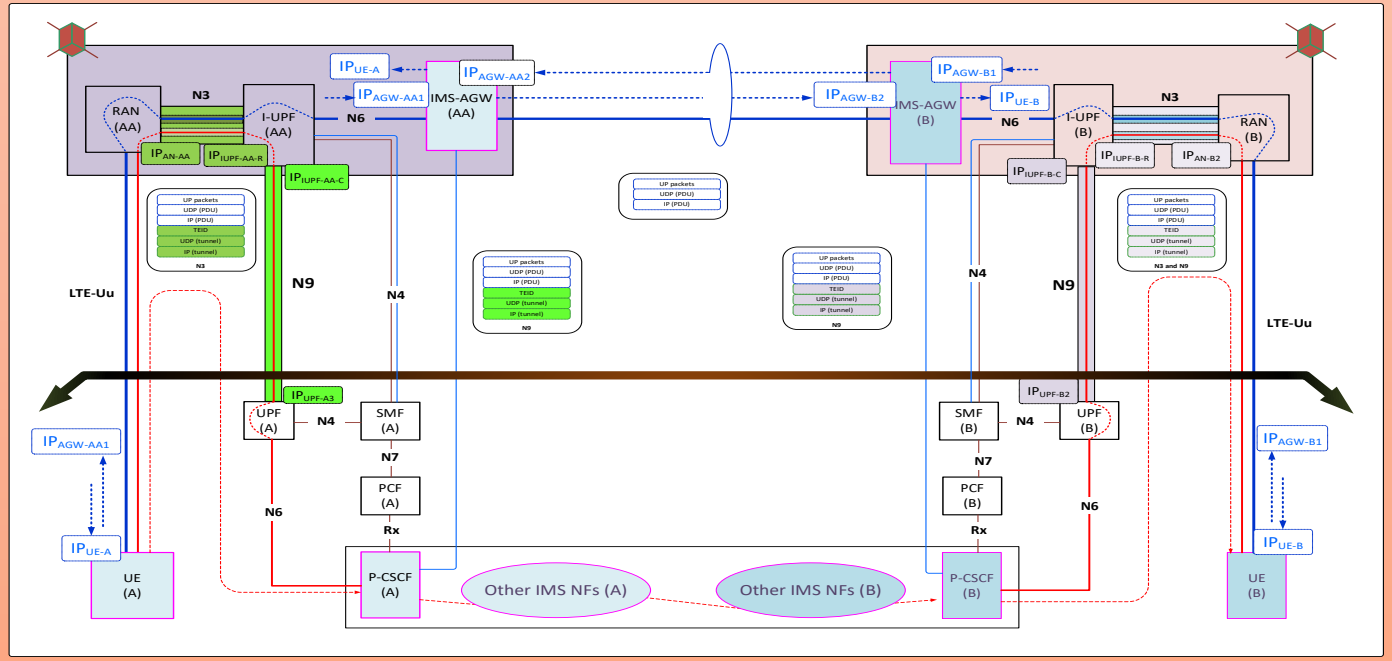

 © 2024 Nokia | Drawn by N. Rao

NOKIA