3GPP TSG SA WG2 Architecture — Ad-Hoc meeting **S2H050111**
Seattle, US
11 – 14 October, 2005

Source: QUALCOMM
Title: Inter-operability between E-UTRAN and UTRAN: Gn-based vs. Iu-based
Document for: Discussion
Agenda Item: 3.3.5
Work Item / Release: SAE

Inter-operability Requirements

- **Essential requirements**
  - **Minimize impact on legacy system**
    - » **Use of legacy interfaces**
  - **Minimize interruption time in case of inter-system handover**
    - » **From 25.913 v7.0.0:**
      - **Less than 350 ms in case of voice***
      - **Less than 500 ms in case of data***
- **Desirable requirements**
  - **Minimize handover delay**
  - **Support for gateway relocation**

- Note that the GSM interruption time in case of inter-system handover is 120 ms (see TS 45.010 Sec 6.13)

Gn-based: from E-UTRAN to UTRAN

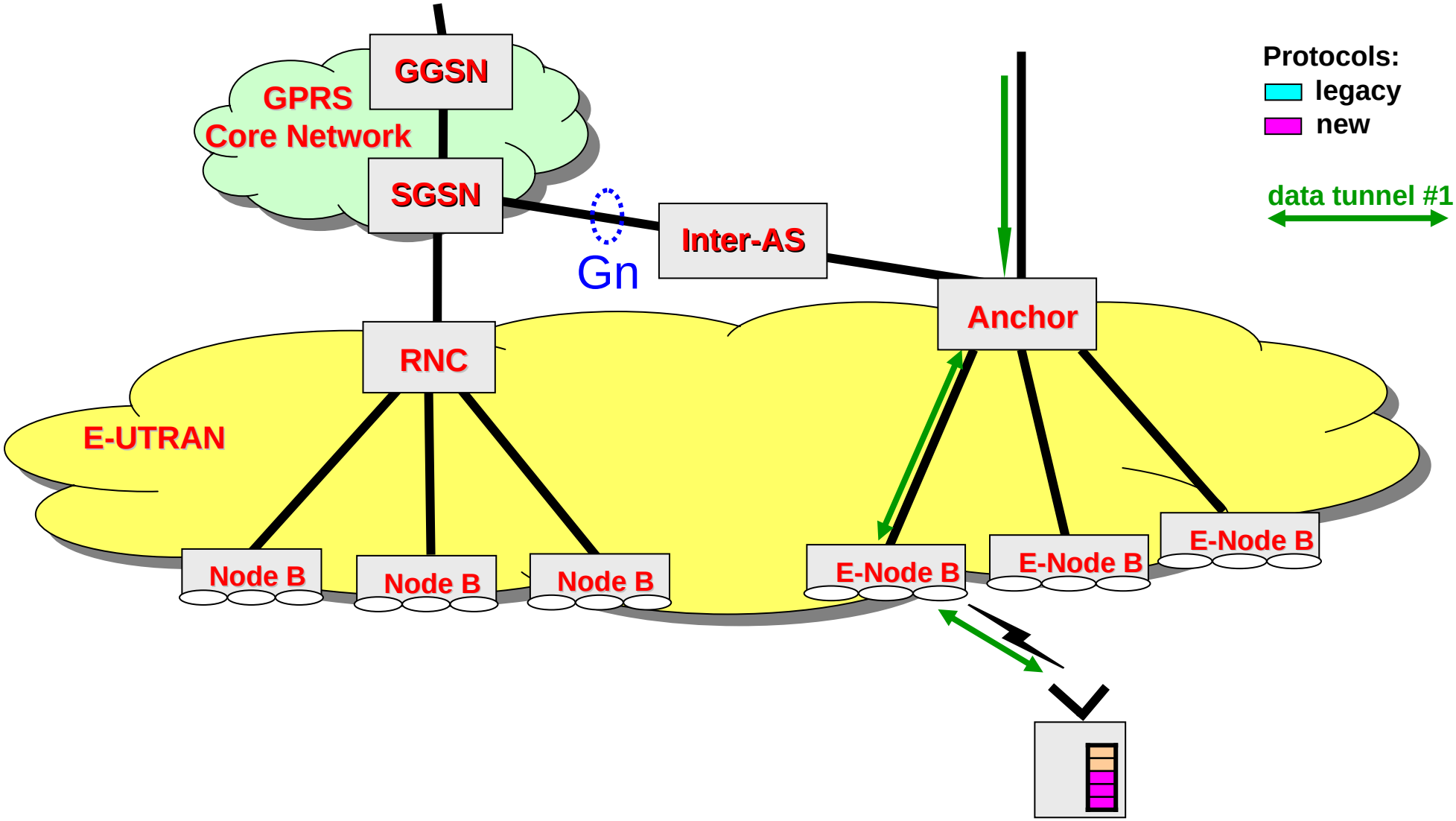

1. New UE connected to the new network.

Gn-based: from E-UTRAN to UTRAN

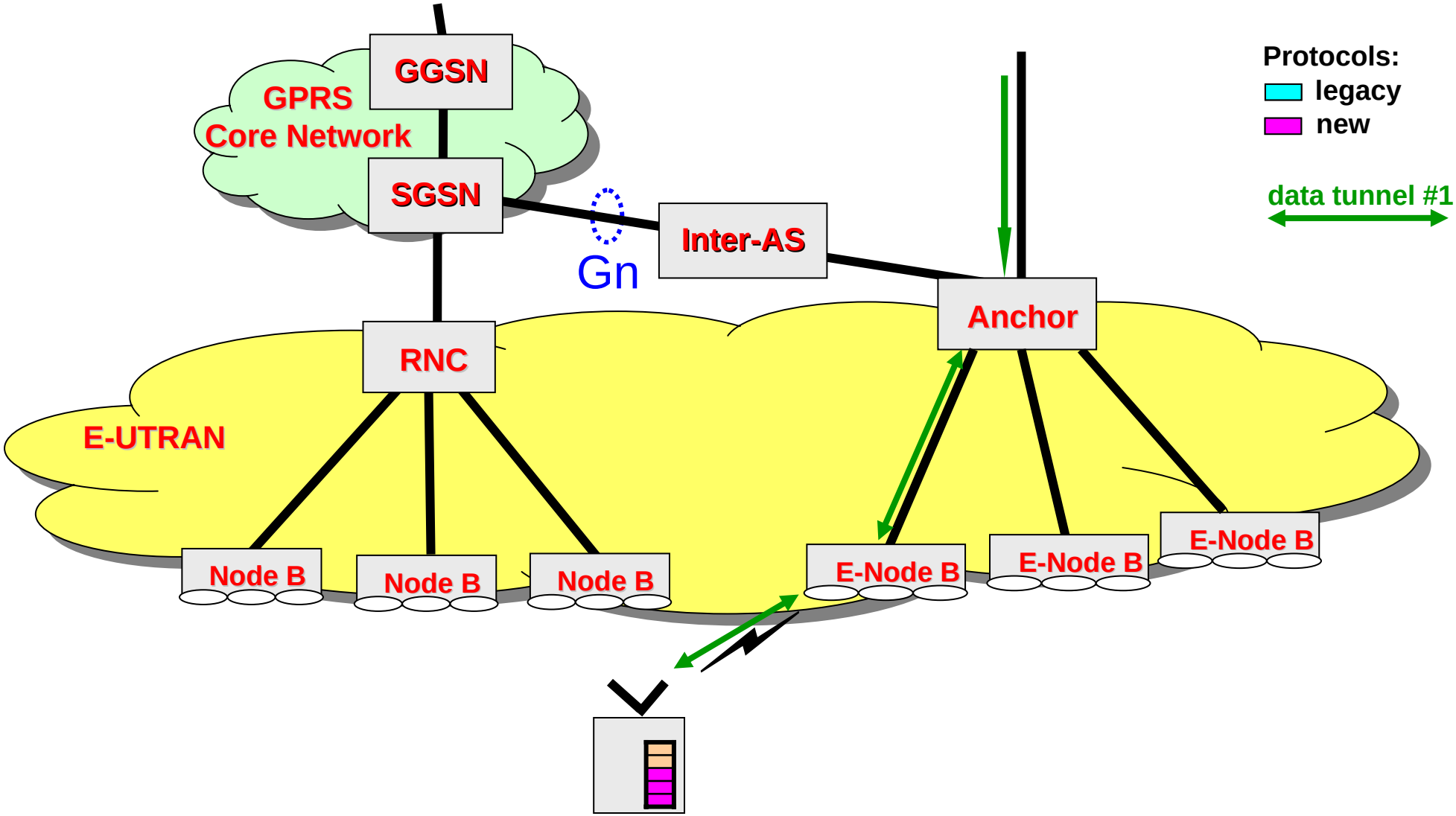

2. UE moving out of coverage of the new network.

Gn-based: from E-UTRAN to UTRAN

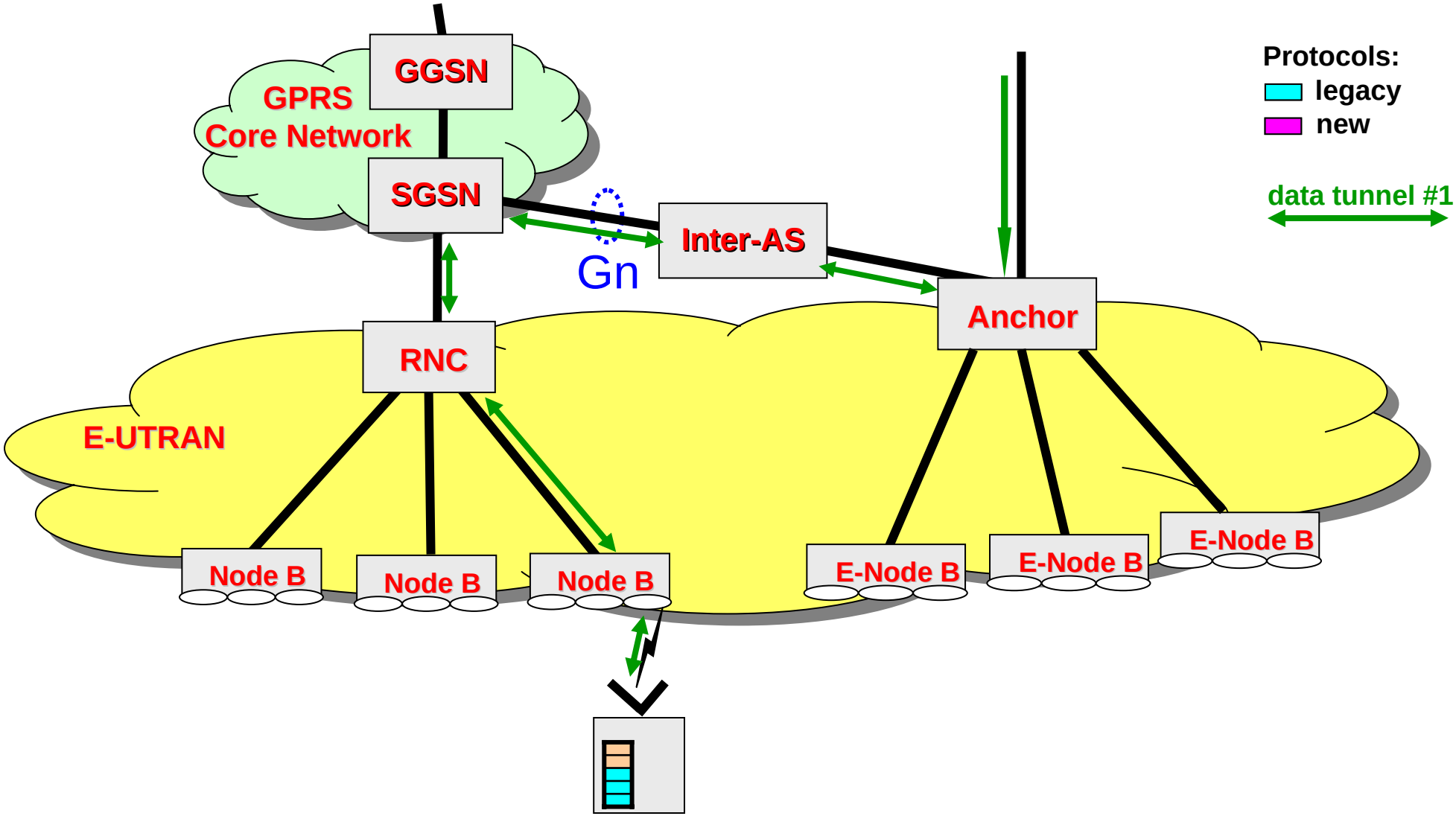

3. inter-system handover is triggered; inter-SGSN SRNS Relocation is performed through the Gn interface; gateway remains at the Anchor; Inter-AS seen as GGSN by the legacy system.

Gn-based inter-system handover Call Flows

STEP 1)
Decision to perform an inter-system handover is made, e.g. by a measurement report from the UE. Inter-SGSN SRNS relocation is signalled from inter-AS node, acting as the (virtual) source RNC, to the target SGSN via a SRNS relocation container. The target RNC will then perform SRNS relocation and receives the SRNS relocation container.

STEP 2)
Necessary information for lossless SRNS relocation and PDP context is transferred.

STEP 3)
The UE completes the handover and sends a complete message to the target RNC, which in turn results in the radio resource release in E-UTRAN.

STEP 4)
PDP context in the (virtual) GGSN is updated (the new data routing is defined). It should be noted that the inter-AS node starts acting as the GGSN in this step while it was acting as the source SGSN in the previous steps.

STEP 5)
Routing Area Update procedure is initiated by the UE. The Anchor and the inter-AS node and the target SGSN are involved.

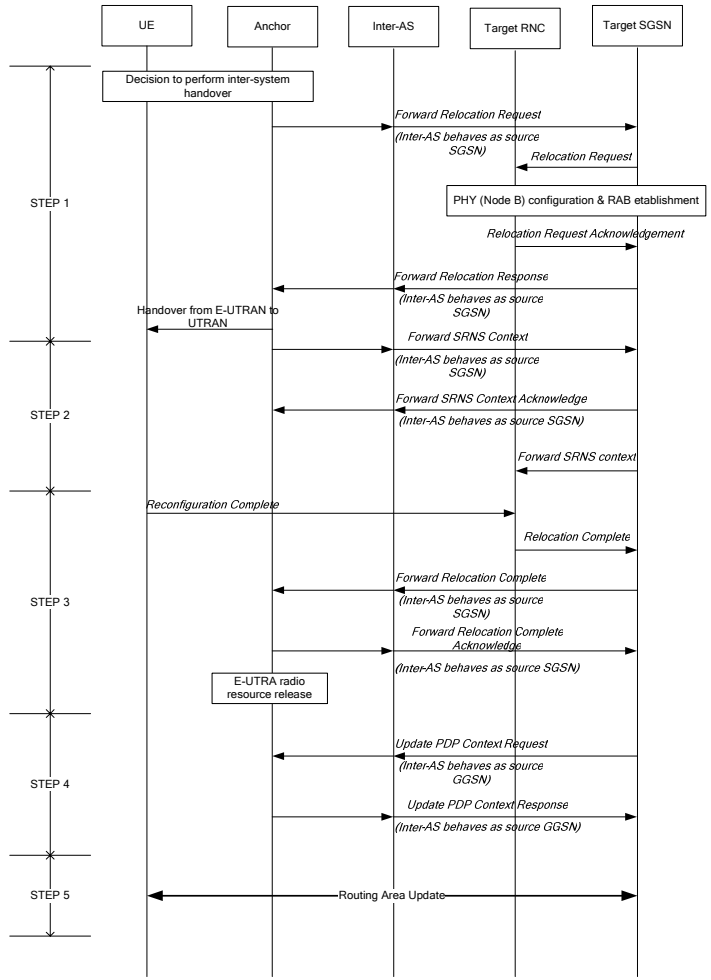

Gn-based inter-system handover

Performance

- Interruption time and overall delay 😐
  - » similar to inter-SGSN SRNS relocation
- Lossless handover is supported if needed
  - » Add complexity and delay to the handover procedure
- Gateway relocation not supported ☹
  - » GGSN relocation not supported in legacy system

Complexity

- Inter-AS needs to support legacy Gn interface ☺
  - » Before inter-system handover, Inter-AS seen as SGSN by the legacy system
    - • Need to transfer legacy GMM/SM/SMS contexts
  - » After inter-system handover, Inter-AS seen as GGSN by the legacy system
- No need to multiplex legacy and new protocol stack during handover ☺

Iu-based: from E-UTRAN to UTRAN

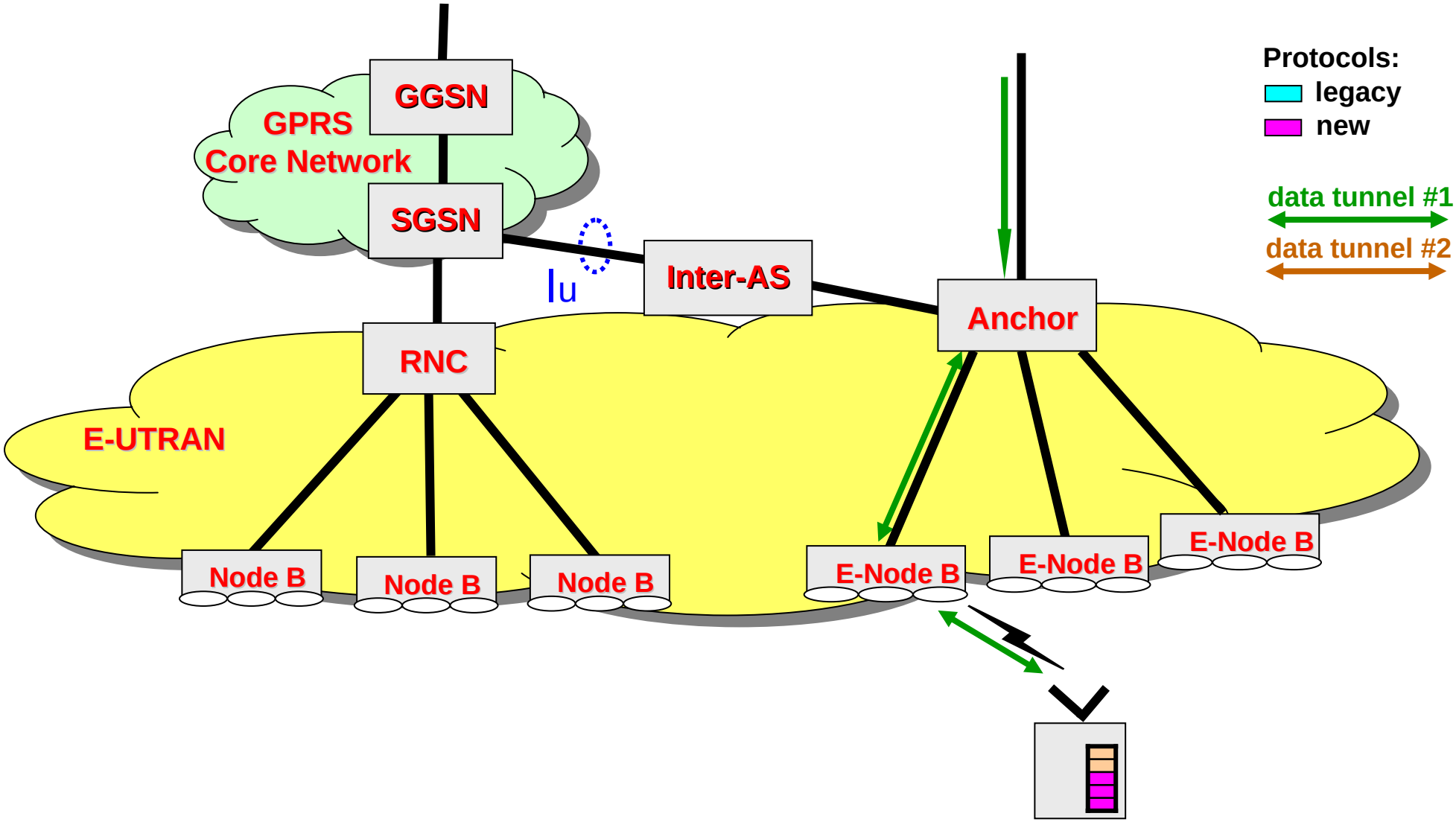

1. New UE connected to the new network; data routed through a data tunnel terminated at the UE; protocol stack running in the UE with all new protocols.

Iu-based: from E-UTRAN to UTRAN

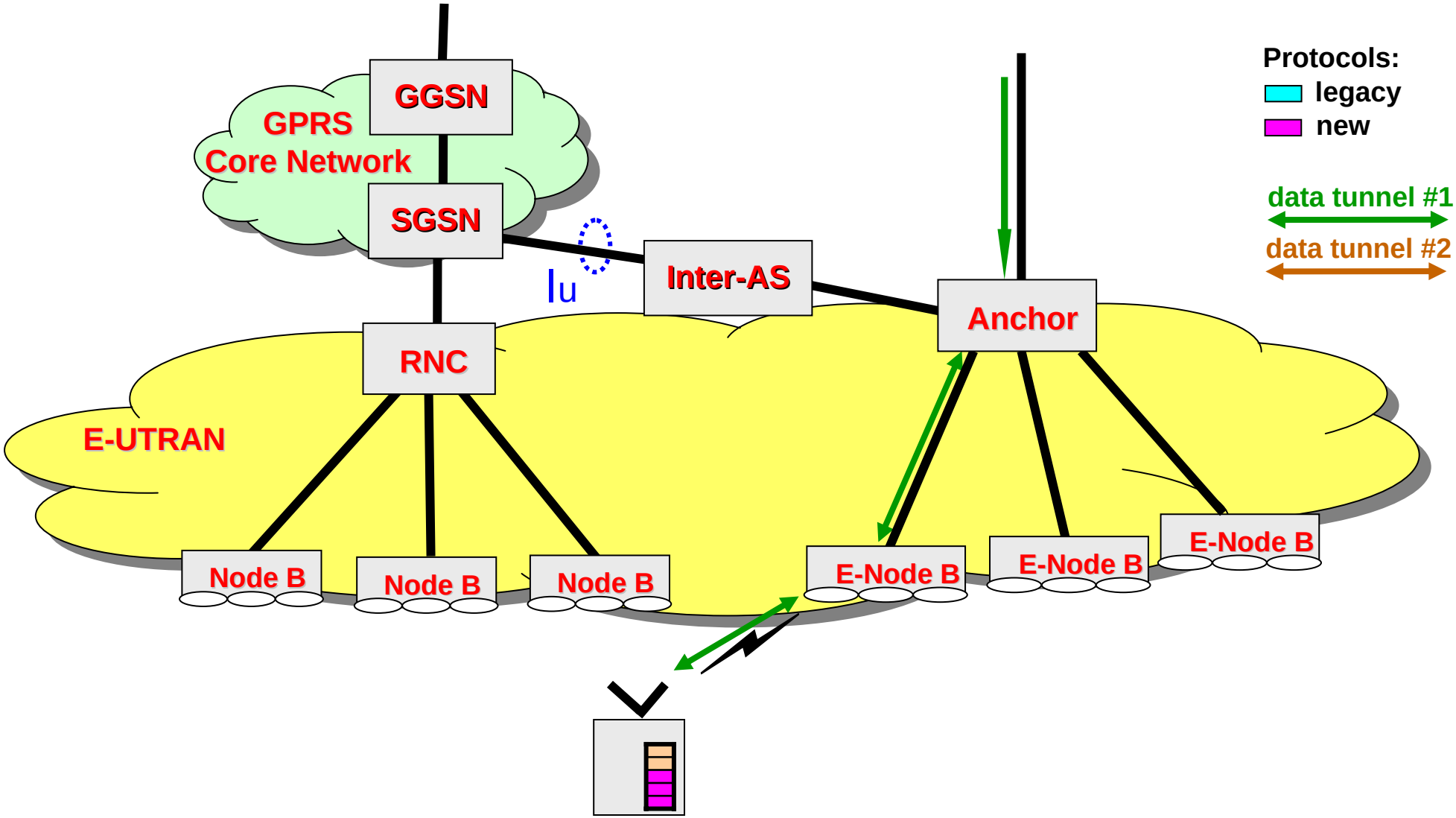

2. UE moving out of coverage of the new network.

Iu-based: from E-UTRAN to UTRAN

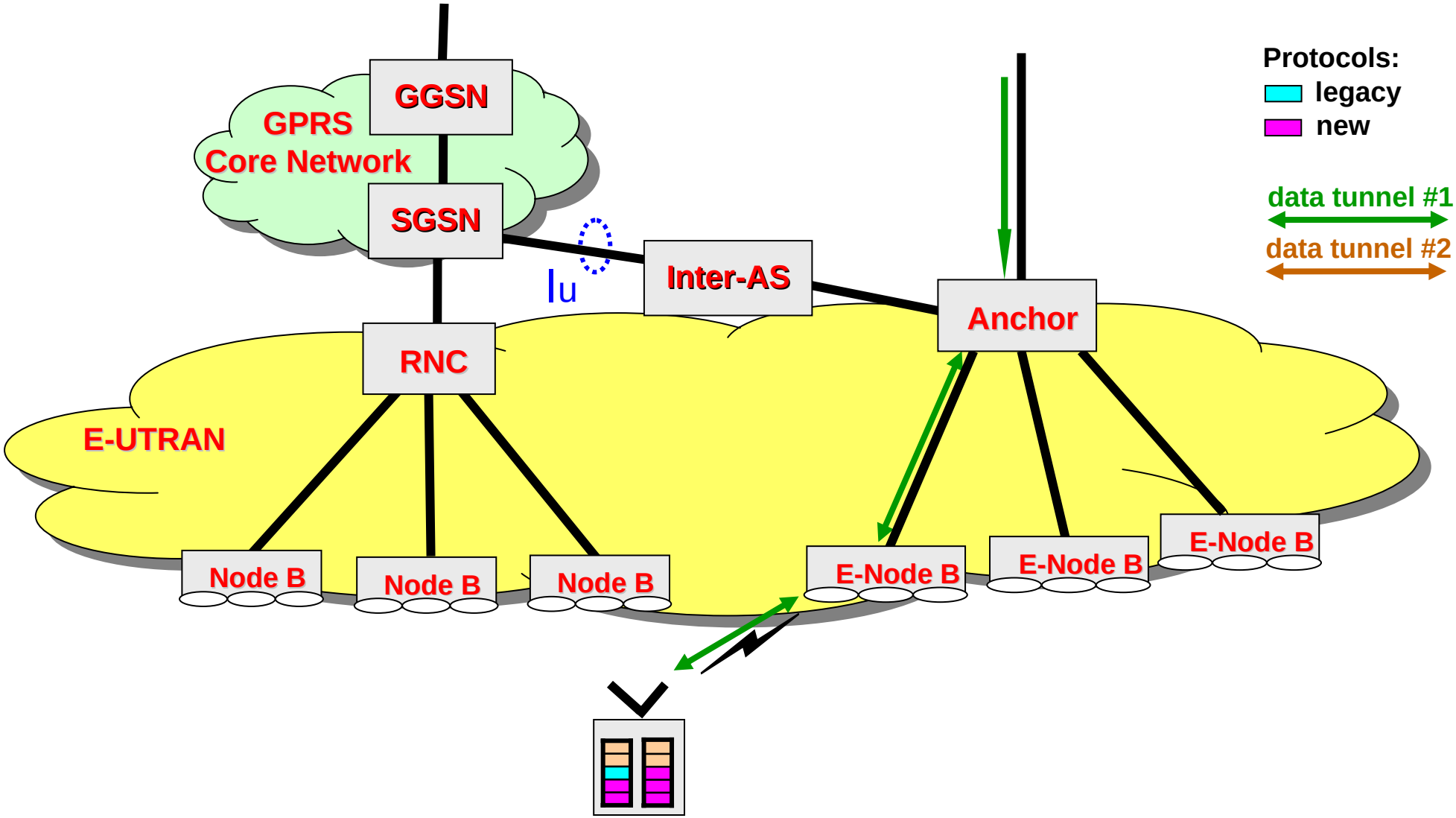

3. Inter-system change decided; second protocol stack brought up in the UE, this time using legacy protocols at RLC and above.

Iu-based: from E-UTRAN to UTRAN

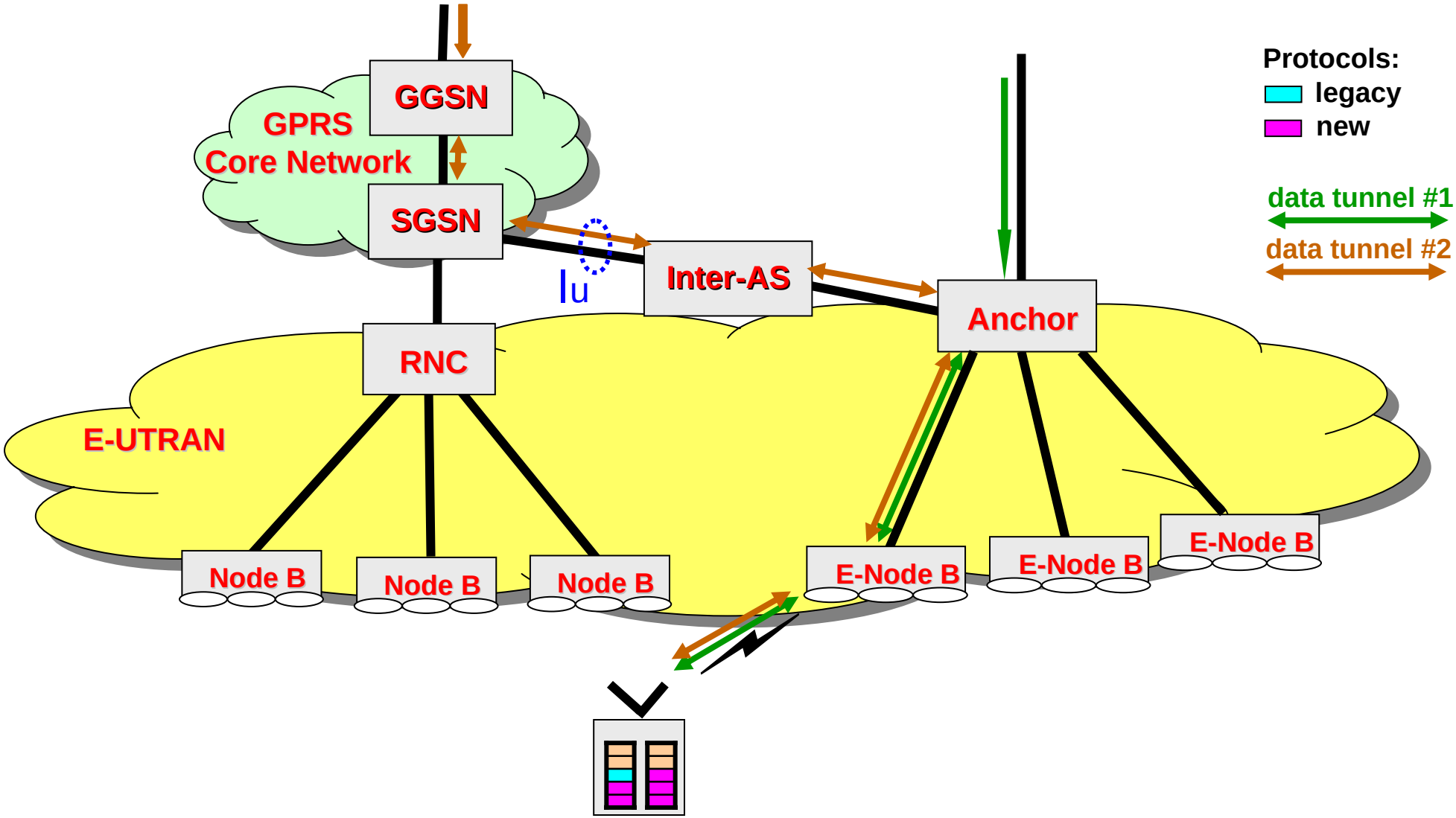

4. New connection to legacy CN through the Iu interface; second data tunnel established using a new IP address; Inter-AS seen as RNC by the legacy system.

Iu-based: from E-UTRAN to UTRAN

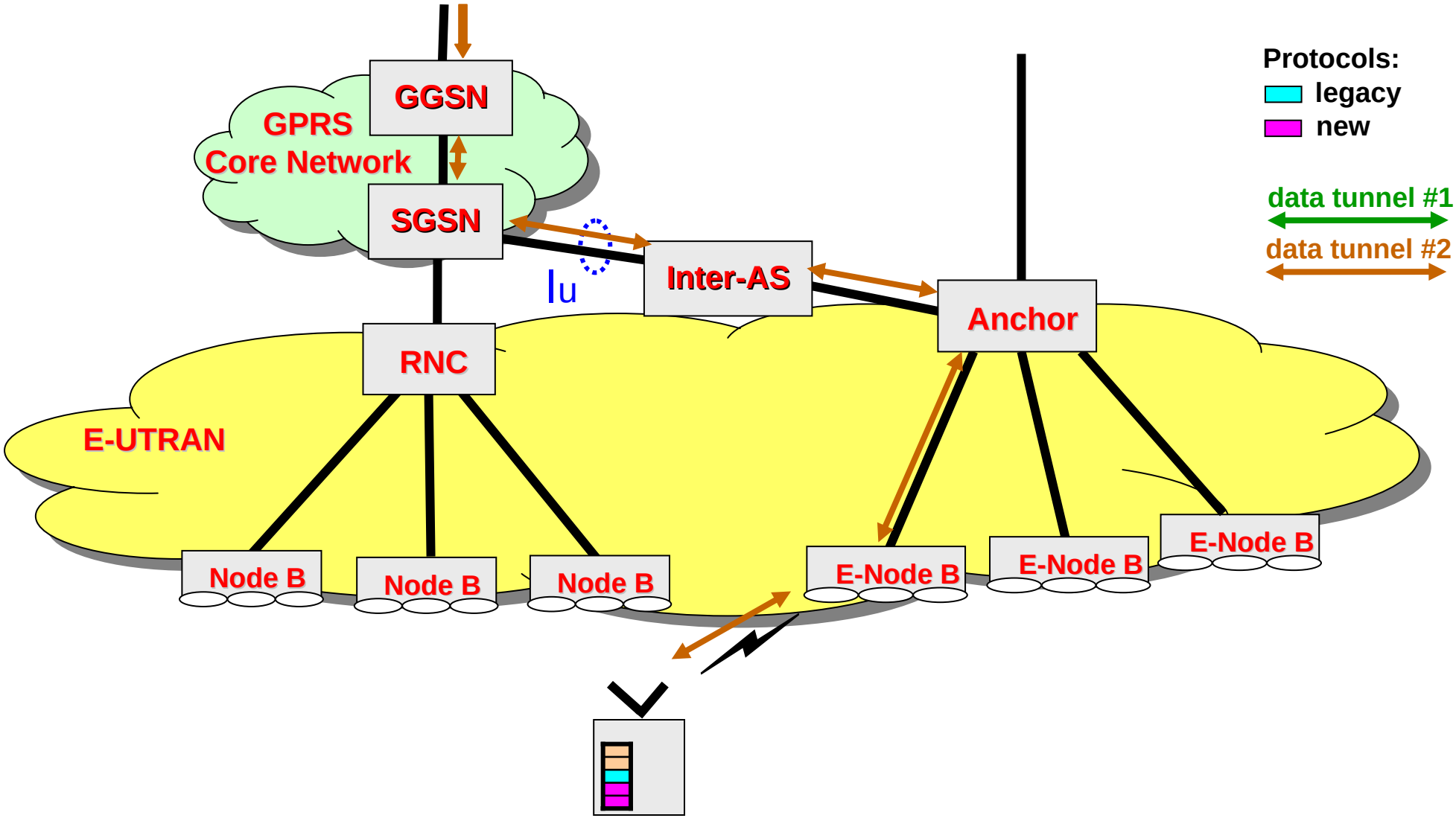

5. New CoA registered (HA starts routing data to the new IP address); data tunnel #1 released; first protocol stack cleared.

Iu-based: from E-UTRAN to UTRAN

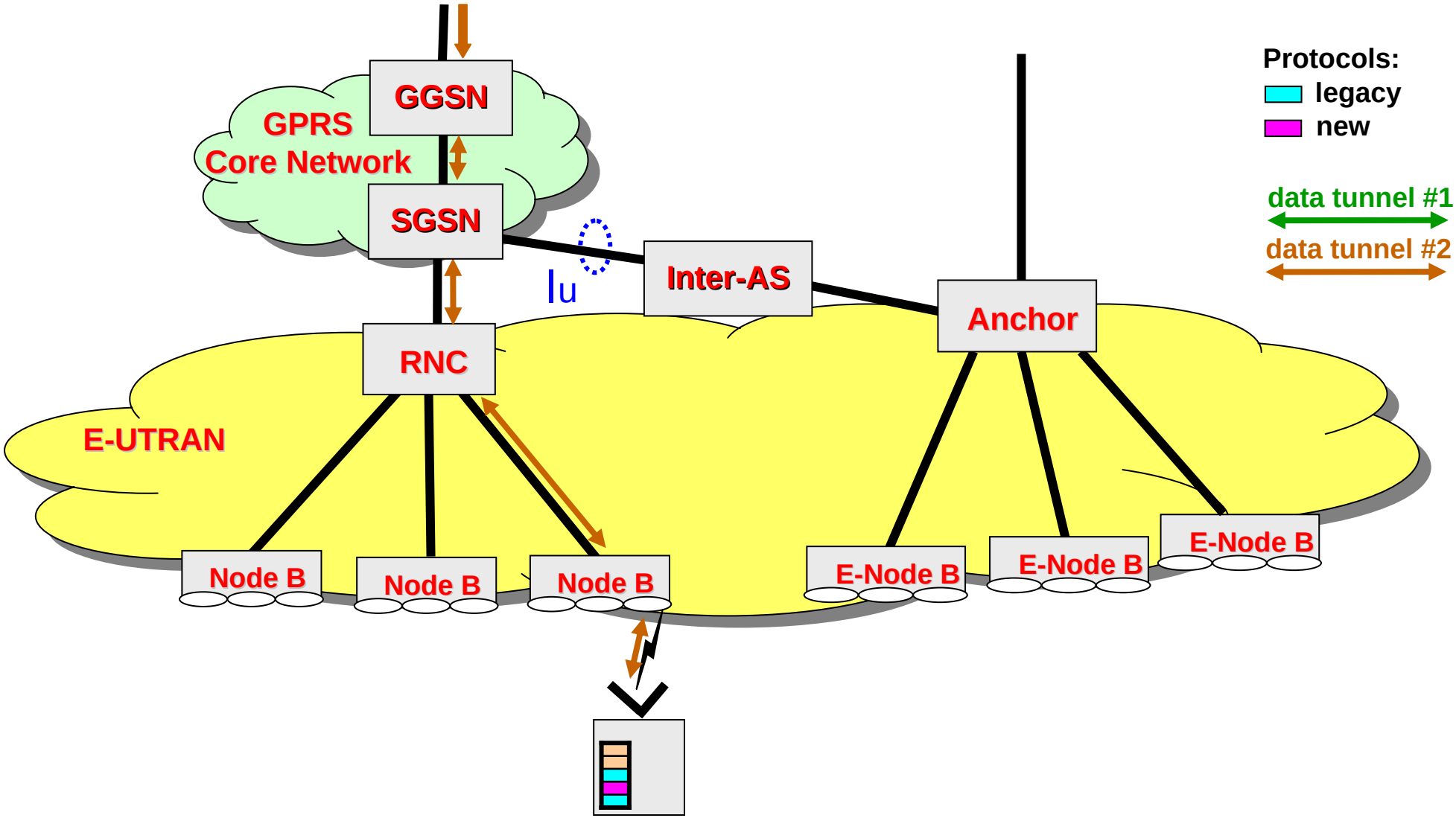

6. Intra-SGSN RNS relocation; transition to legacy protocol stack.

Iu-based inter-system handover

Performance

- Overall handover delay ☹
  - » Similar to call setup time in the legacy network
- Interruption time ☺
  - » Similar to intra-SGSN SRNS relocation with hard handover
- Lossless handover is supported if needed
  - » Add complexity and delay to the handover procedure
- Gateway relocation supported 😐
  - » Performed together with the radio link handover

Complexity

- Inter-AS needs to support legacy Iu interface ☹
  - » Inter-AS seen as RNC by the legacy system
    - • terminates legacy MAC/RLC/RRC
- Need to multiplex legacy and new protocol stack during handover ☹

Conclusions

- **If the inter-system gateway relocation is not required**
  - **Gn-based is the preferred solution provided that the inter-SGSN SRNS relocation can meet the requirement on interruption time**
    - » **Minimize complexity**

- **If the inter-system gateway relocation is required**
  - **Iu-based solution should be considered**