CEPT/CCH/GSM

Recommendation GSM 03.45

TECHNICAL REALIZATION OF FAX-GROUP 3

VERSION: 1.0.0

EDITOR: P. DI TRIA (Italy)

DATE : September 23, 1988

ORIGINAL LANGUAGE: English

NUMBER OF PAGES: 15

LIST OF CONTENTS:

0. SCOPE
1. SERVICE DEFINITION
2. NETWORK ARCHITECTURE
3. REFERENCE CONFIGURATION AT THE MOBILE STATION
4. CONNECTION TYPES
5. USE OF TERMINAL ADAPTATION FUNCTIONS
6. SIGNALLING ASPECTS
7. INTERWORKING TO FIXED NETWORKS
8. SUPPORT OF GROUP 3 ERROR CORRECTION PROCEDURE
9. NON-TRANSPARENT SUPPORT

ANNEX
Timing requirements

APPENDIX
1. Abbreviations from CCITT Rec. T.30
2. Procedure examples

0. SCOPE

This Recommendation deals with the procedures allowing the technical realization of the Group 3 facsimile Service within the GSM PLMN, according to the definition of the Teleservice 61 specified in the GSM Rec. 02.03.

1. SERVICE DEFINITION

The Group 3 facsimile service, as basically defined in the CCITT Rec. F. 160, is an international Telematic Service for ISO A4 document transmission between two facsimile stations. The coding of document information has to comply with CCITT Rec. T.4.

This Teleservice is intended to allow facsimile connections between Group 3 apparatus using:

- a GSM PLMN as a standalone facility (mobile-to-mobile communication);
- a GSM PLMN interworking with the fixed PSTN/ISDN (mobile to/from land communication).

In both cases the general procedure for end-to-end information transmission complies with the CCITT Rec. T.30, relevant to facsimile transmission over the PSTN (*).
The interworking between different networks is based on CCITT Rec. X. 300.

The specific features relevant to the Service are:

- it is an interactive service;
- point-to-point communication configuration;
- alternate speech/fax information transfer capability;
- both mobile originated and mobile terminated calls;
- circuit duplex, synchronous and symmetric, information transfer mode;
- different end-to-end transfer rates within the same call;
- a standard synchronous terminal adaptation function is used (See GSM Rec. 07.03) in the MT.

(*) Operational provision of facsimile service over Public Data Networks is under study at CCITT (see CCITT Rec. F.180); so is left F.F.S. the Teleservice definition where the PLMN has to interwork with such networks.

2. NETWORK ARCHITECTURE

The Fig. 1/03.45 reports the network schemes realizing the operability of this Teleservice.

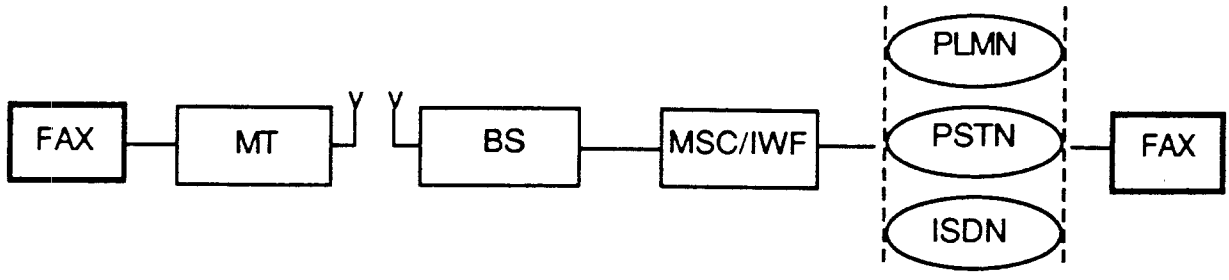

Fig. 1/03.45 Network architecture

The case of mobile-to-mobile communication is obtained by means of an intermediate passage across the IWF.
The interworking of the PLMN with the PSTN/ISDN(*) performs both mobile-to-land and land-to-mobile operability.

3. REFERENCE CONFIGURATION AT THE MOBILE STATION

In accordance with the Teleservice definition given in GSM Rec. 02.03, a Group 3 facsimile terminal has to be regarded as a 2-wire analogue terminated equipment.

In the Fig. 2/03.45 all the possible reference configurations for the Mobile Station are considered.

(*) As the CCITT Rec.T.30 is a specific PSTN procedure, the interworking for ISDN, where a 3.1 kHz access shall be exploited, has to be intended for transit support only.

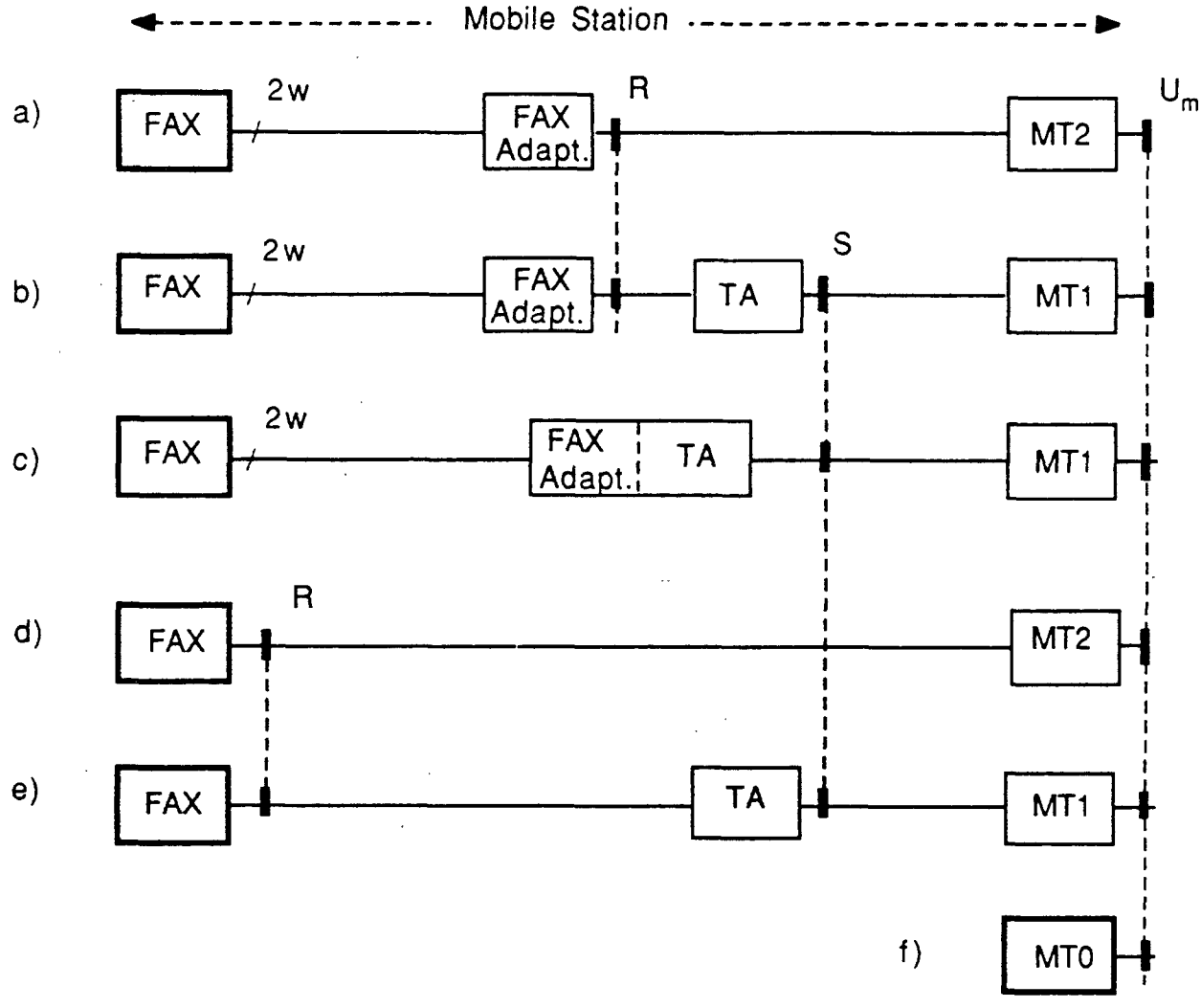

Fig. 2/03.45 Reference configurations

The definition of all the functional blocks (except for Fax Adaptor block, see below) are given in GSM Rec.04.02.

3.1 Standard configurations

Fig. 2a/03.45 has to be considered as the standard configurations, so that all the existing Group 3 facsimile apparatus can be connected to the PLMN.

Fig. 2b/03.45, Fig. 2c/03.45 and Fig. 2e/03.45 are F.F.S..

R and S reference point shall be conform to the GSM Rec. 07.03.

3.1.1 Fax Adaptor

The Fax-adaptor block, Fig. 3/03.45, is intended to specifically complement the Group 3 facsimile apparatus in order to be able to communicate over a GSM PLMN.

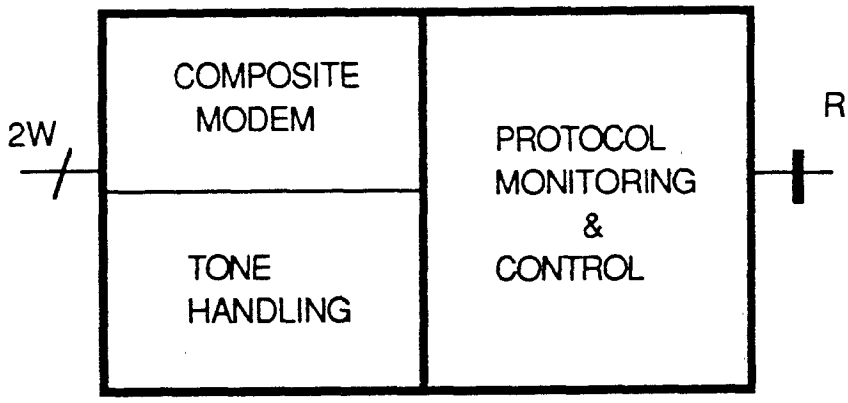

Fig. 3/03.45 Fax Adaptor scheme

Whether it has to be a function internal to the GSM PLMN, or an external accessory associated with the Group 3 apparatus, is beyond the scope of this Recommendation, and in any case, does not affect at all the working of the procedure as here described.

It can be functionally partitioned in two sections:

- an analogue section, in charge of:

  * the mo-demodulation process according to the relevant CCITT Recs. V.21, V.27 ter and V.29, as fully required by CCITT Rec. T.30;

  * handling the tonal signaling towards the analogue 2-wire termination;

  * handling 2-wire autocalling/answer functions when necessary (see Section 6);

- a digital section, in charge of:

* tracking the T. 30 protocol, monitoring all the numerical flags pertinent to the control of the protocol procedure;

* provide control information on the R reference point, as commands to the MT;

* control the analogue section.

The signaling on the R reference point is in accordance with the GSM Rec. 07.03.

3.2 Optional configurations

The Fig. 2d/03.45 has to be regarded as a more practical, and less complex, implementation of the above standard configurations, taking into account a destination of the facsimile equipment for use in non-PSTN environments, where the analogue 2-wire termination is not optimal.

Fig. 2f/03.45 is the integrated configuration, as explicitly mentioned in GSM Rec.04.02.

4. CONNECTION TYPES

Table 1/03.45, arranged from Table 6/03.10, summarizes the attributes of the connection elements needed within a GSM PLMN connection, as concerns this Teleservice.

Teleservice in GSM PLMN	Access at Mobile station	Radio Interface Conn. Element	Intermediate Rate RA1 to RA2	BS-MSC/IWF Conn. Element	Protocol Model
Facsimile group 3	Data cct duplex synchronous access alternate speech/data: * 9.6 kbit/s * 4.8 kbit/s * 2.4 kbit/s	Cct mode unstructured altern. speech group 3 fax 3.6 or 6.0 or 12.0 Kbit/s FR	Speech NA 8 kbit/s 16 kbit/s	Cct mode structured 64 Kbit/s alternate speech group 3 fax	see Fig. 5/03.45

Table 1/03.45

The Fig. 4/03.45 shows the scheme of a typical GSM PLMN connection for this Teleservice, considering respectively R and S access at Network Termination.

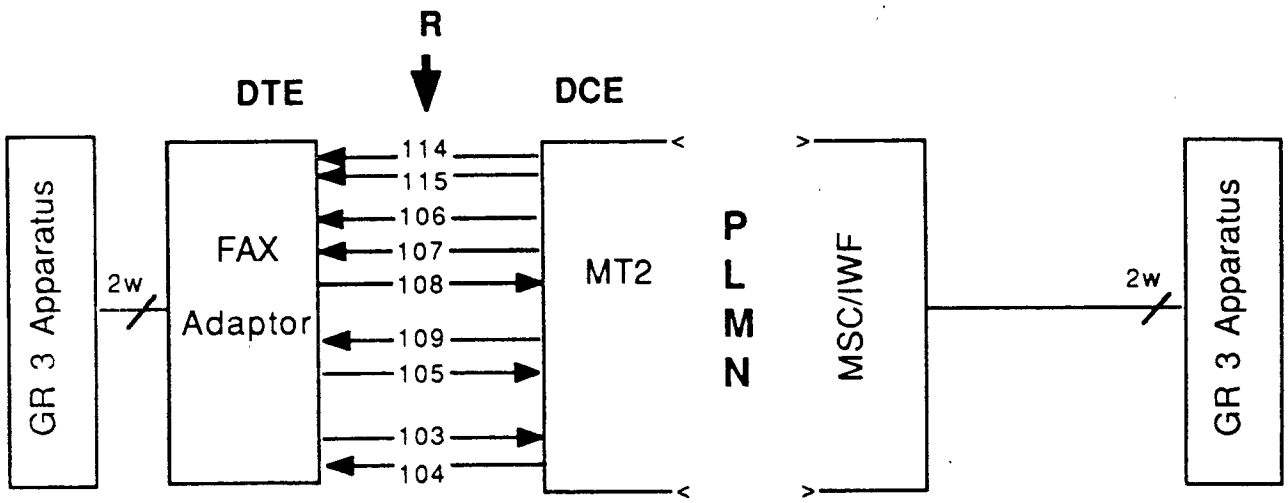

Fig. 4a/03.45 Standard Teleservice connection

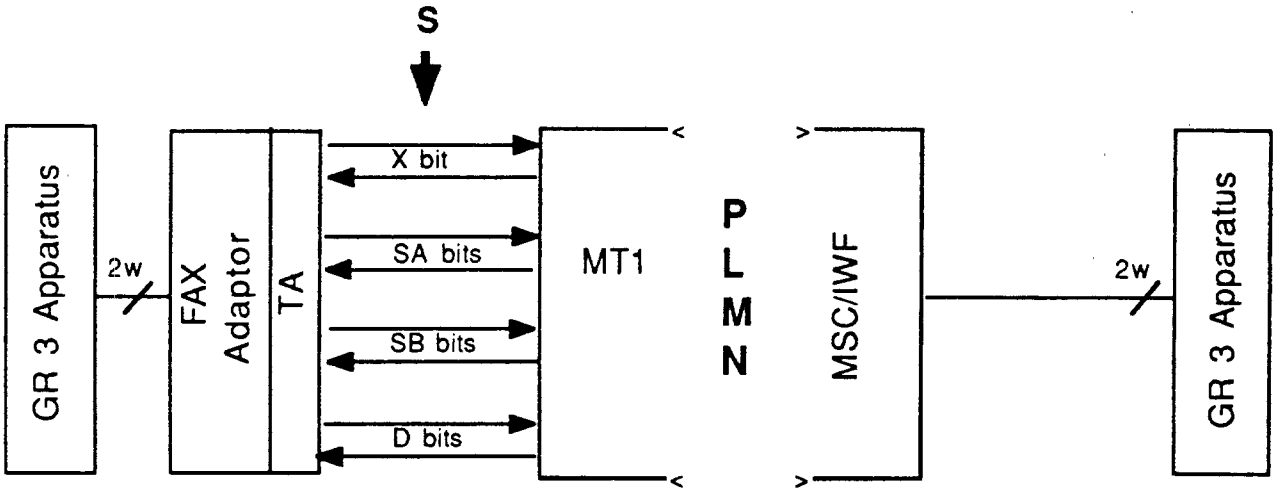

Fig. 4b/03.45 Optional Teleservice connection (F.F.S.)

4.1 Access at Mobile Station

Independently of the reference point considered (R or S or 2-wire analogue), to grant full support to the CCITT Rec. T.30, requiring different transmission speeds, the following strategy shall be implemented:

- PLMN provides for three Access Rate only, that is 9600 bit/s, 4800 bit/s, 2400 bit/s;

- In-Call-Modification (ICM) procedure is used for switching between Speech phase and facsimile phase, as well as to select the suitable Access Rate (9600/4800/2400 bit/s) within the facsimile phase, as resulting from the preliminary end-to-end negotiation between the terminals;

- to transport Binary Coded Signaling (BCS) requiring a synchronous 300 bit/s bit-rate, speed conversion will be used at both the PLMN ends, based on a times n multiplexing mechanism (see section 4.3.1.2), to allow exploitation of the same Message speed;

- local flag stuffing is applied by the Fax Adaptors towards the terminals, to keep active the data link for the duration of ICM;

4.2 Protocol model

The Fig. 5/03.45 depicts the protocol model for this Teleservice, deduced from model 2b of Fig. 6/03.10, respectively for mobile originated facsimile transmission (Fig. 5a/03.45) and mobile terminated facsimile transmission (Fig. 5b/03.45).

The main points to be underlined are:

- all the protocol modules specific for this Teleservice are confined in Fax Adaptors at both the MT and IWF ends;

- In-Call-Modification procedure relevant to speed change is initiated by the IWF; however, ICM for speech to facsimile is initiated by the MT;

- the working of Fax adaptation functions, both on the transmitter and receiver sides of the Teleservice Connection is based on detection of critical BCS frames in the negotiation phases (B, D, E) of the T.30 protocol procedure.

4.2.1 Checkpoint procedure for BCS/Fax-message transitions

For alignement purpose of the whole procedure on both transmitter and receiver sides, mainly to grant selection of the proper mo-demodulation functions (V. 21, V. 27 ter, V. 29) towards the analogue side of the connection, a checkpoint mechanism is associtaed to critical points of the T.30 procedure.
This mechanism is initiaded by sending a check pattern over the radio path continuously, and looking for the same pattern echoed by the remote side.
The bit pattern is specific to the particular checkpoint in the procedure.

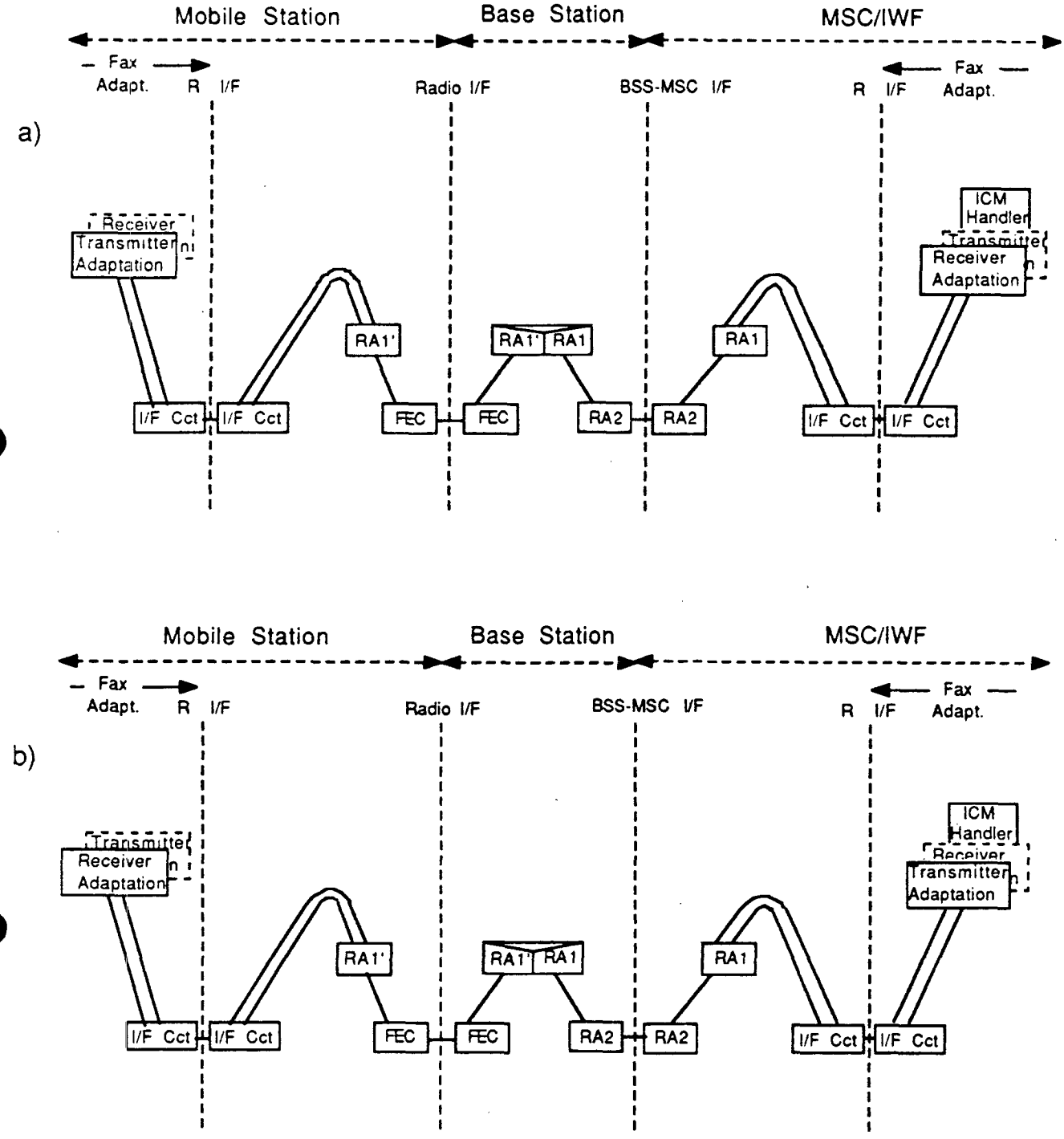

Fig. 5/03.45 Protocol model

4.2.2 ICM request

ICM request is initiated by the Fax adaptation function in the IWF, triggered by the detection of an FTT frame.
The ensuing DCS frame is monitored and, provided a different bit-rate is requested, the whole DCS frame up to TCF included is blocked, to execute the ICM procedure.
A time interval of 3 seconds is allowed for ICM completion, before a new DCS frame is originated by the T.30 procedure.

4.3 Fax Adaptor interworking

Two different configurations are required in the Fax Adaptor:

- transmitter adaptation, established at the terminal side acting as actual facsimile document transmitter during the call;

- receiver adaptation, established at the terminal side acting as actual facsimile document receiver during the call.

The proper configuration is settled on both the Network sides by detecting DIS/DTC frame just at the beginning of the B phase in the T.30 protocol procedure.

4.3.1 Main features of Fax Adaptor

Some main features are common to both transmitter and receiver adaptation function.

4.3.1.1 Message transmission

Message transmission is fully transparent, for the C phase of the Rec. T.30 as well as for the segments of B phase requiring message speed.

4.3.1.2 Multiplexing of BCS to the Fax Message Speed

At both the IWF and the Fax Adaptor in the MS, the 300 bit/s BCS messages are multiplexed to the fax message speed.
The means by wich this is done is as follow.
On receipt from the analogue link of a fax control message, the Fax Adaptor (or IWF) will pass the message repeatedly to the IWF (or Fax Adaptor). The number of repetitions is governed by the current fax message speed. Thus each message is repeated 'n' times, where:

$$n = \frac{\text{Fax message Speed}}{300}$$

On the receiving side, as soon as the IWF (or Fax Adaptor) receives an instance of the message with correct FCS, it will be sent out on the analogue link.
If no correct frame is received, nothing is sent to line.

During periods when no information is available to be sent between the MS and the IWF, the Fax Adaptor and the IWF will transmit binary ones to each other.

4.3.1.3 Frame detection

While in BCS, the following frames have to be detected:

- DIS/DTC, to actually settle transmitter/receiver adaptation configuration (*)

- DCS, to realize the actual message transmission speed requested (see Table 2/T.30);

- FTT, to enter the protocol routine for ICM.

4.3.1.4 Non-standard facilities

Non-standard facilities are trapped and deleted at the IWF side.

4.3.2 Transmitter adaptation

The following operations are specifically in charge of transmitter adaptation function.

4.3.2.1 RTC Sequence checkpoint

On detecting RTC sequence, a checkpoint procedure is executed to grant switching between Message phase and BCS phase.

The bit pattern transmitted is the EOL character (see CCITT Rec. T.4), typical of RTC sequence, and on receiving the same character looped back by the receiver adaptation function, a correct switching is assumed.

4.3.2.2 DCS checkpoint

Is executed to grant switching from BCS speed to Message speed, within the B phase of the T.30 procedure.
In this case the bit pattern is the DCS frame received.

4.3.2.3 DISCONNECT procedure

Upon detection of DCN frame (see T.30) from the local

(*) As the 7200 bit/s transmission speed is not supported by the PLMN, the relevant code in DIS/DTC frame will be modified, actually forcing the speed of 4800 bit/s.

terminal, signifying the end of facsimile transmission, initiates the DISCONNECT procedure.

4.3.3 Receiver adaptation

The receiver adaptation function has to be intended tightly coupled to the transmitter adaptation function to fully support T.30 protocol procedure.
The following operations are specifically in charge of the receiver adaptation function.

4.3.3.1 CFR checkpoint

Is aimed at granting switching from the end of the B phase (BCS speed) to C phase (Message speed) of T.30.
In this case the bit pattern is the CFR frame received.

4.3.3.1 MCF checkpoint

Provides the mechanism for switching from D phase (BCS speed) to C phase (Message speed) of T.30.
In this case the bit pattern is the MCF frame received.

5. USE OF TERMINAL ADAPTATION FUNCTIONS

According to the Connection types (Fig.5/03.45) there are two classes of TAFs to be considered.

5.1 TAFs defined for synchronous services

Are those described for synchronous transparent bearer capabilities in GSM Rec. 07.03.
The Rate Adaption functions shall comply with the GSM Rec. 04.21
The interchange circuit signaling mapping is in accordance with the GSM Rec.07.03.

5.2 Specific TAFs for facsimile service

Integral part of an end-to-end connection for this Teleservice is the Fax Adaptation function, as described in Section 4 of this Recommendation.
This function assumes a double configuration:

- transmitter adaptation function, established at the PLMN side where is the terminal actually performing document transmission;

- receiver adaptation function, established at the PLMN side where is the terminal actually receiving the facsimile document.

6. SIGNALING ASPECTS

GSM Recommendation 07.03 identifies the bearer capability requirements to be supported by the terminal adaptation function in the MT. The specific signaling requirements are those for "Speech" and "Group 3 facsimile".

The MT indicates in the call setup request the first service requirement, e.g. speech, by sending this as first bearer capability.
For an "autocalling" facsimile request the Group 3 Fax bearer capability is sent as the first bearer capability.

6.1 Call establishement

The call establishement procedures identified in Recommendation 07.03 apply to this service.

6.2 Automatic call/answer procedure for Group 3 Facsimile

The Fax Adaptor may support autocalling autoanswering Group 3 facsimile machines in the following manner.

6.2.1 Autocalling

The Fax Adaptor is able to "read" the loop disconnect or DTMF dialling being passed over the 2 wire interface from the Group 3 facsimile equipment.
The receipt of the required subscriber number initiates an "autocalling" procedure over the V.24 interface to the Mobile termination, e.g. V.25 bis procedure.
The Mobile Termination then processes this call in line with the procedures identified in GSM Recommendation 07.03.

6.2.1 Autoanswering

The Fax Adaptor on receiving an "autoanswering" procedure over the V.24 interface, e.g. V.25 bis procedure, should initiate the "ringing" condition over the 2-wire interface to the Group 3 facsimile equipment.
On receipt of the "answer" for the Group 3 facsimile equipment, the Fax Adaptor shold generate the answering procedure over the V.24 interface, e.g. V.25 bis procedure.
The call is then progressed by the MT as identified in GSM Recommendation 07.03.

7. INTERWORKING TO FIXED NETWORKS

PSTN and ISDN only are considered, both used as transit network to complement the PLMN in the end-to-end connection between GR 3 facsimile apparatus, Fig. 6/03.45.

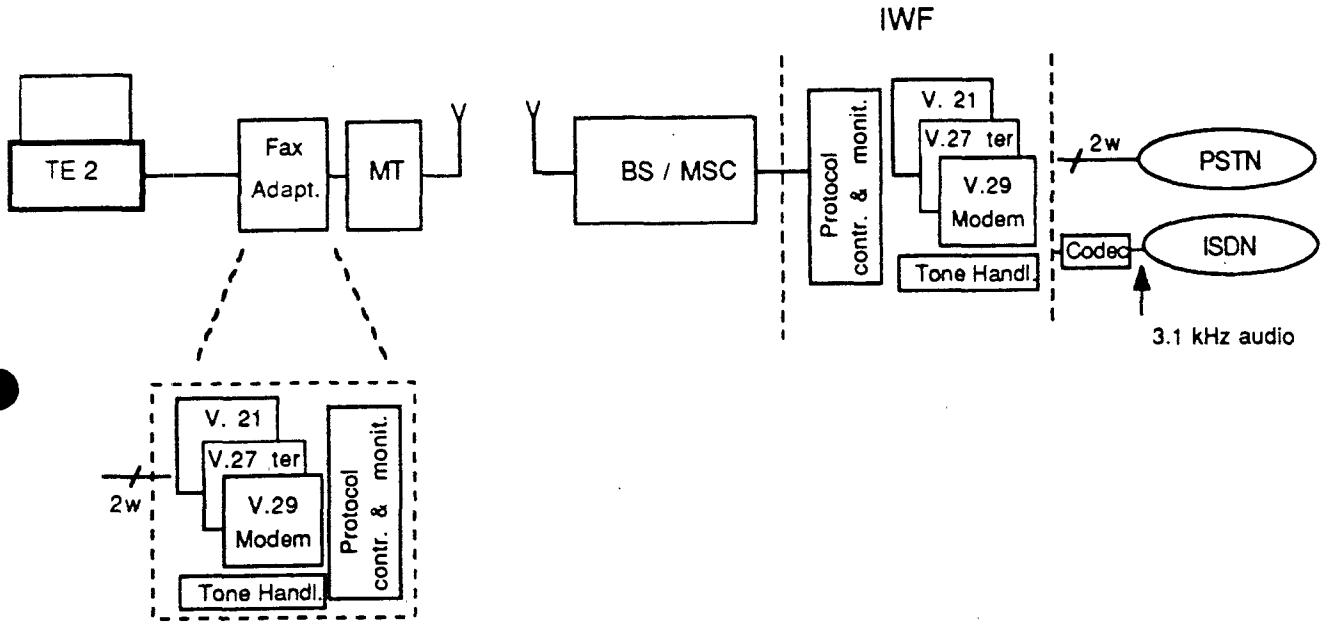

Fig. 6/03.45 Network interworking

7.1 Interworking to PSTN

As the standard access of Group 3 facsimile terminals for this Teleservice is a 2-wire analogue interface, all the technical requirements for network interworking to PSTN are identical in principle to those encountered for the terminal connection to the MT.

The key functional block is the Fax Adaptor described in Section 4 of this Recommendation.

As far as network interworking is concerned, the main function to be performed by such block is the correct managing of a composite modem, in accordance with the requirements of CCITT Rec. T.30:

- V.21 synchronous mode, as standard facility for all BCS phases;
- V.27 ter for message speeds of 4800 and 2400 bit/s;
- V29 for 9600 bit/s message speed.

The mechanism for selecting the right modem is the following:

- the actual message speed is obtained by detecting the DCS frame (see Table 2/T.30) while in BCS phase;

- every time a checkpoint procedure is executed, there is an interchange between the V.21 modem and the actual modem agreed upon between the terminals for message transmission.

Times for settling the modems will be in accordance with the requirements of Rec. T.30.

7.2 Interworking to ISDN

The use of 3.1 kHz bearer capability of ISDN allows for an interworking of PLMN very similar in practice to the scheme for PSTN, Fig. 6/03.45.

The Fax Adaptor function is in conformance with the description given in Sections 4 and 7.1 of this Recommendation.

8. SUPPORT OF GROUP 3 ERROR CORRECTION PROCEDURE

F.F.S.

9. NON-TRANSPARENT SUPPORT

F.F.S.