ETSI/TC SMG
Released by : ETSI/PT 12
Release date: February 1992

RELEASE NOTE

Recommendation GSM 02.03

TeleServices supported by a GSM PLMN

Previously distributed version : 3.4.0 (Release 1/90)
New Released version February 92 : 3.4.0 (Release 92, Phase 1)

1. Reason for changes

No changes since the previously distributed version.

ETSI/GSM

Released by: ETSI PT12

Date: February 1992

Recommendation: GSM 02.03

Title: Teleservices Supported by a GSM PLMN

List of contents:

0. Scope

1. Framework for describing Teleservices supported by a GSM PLMN

2. List of Teleservice attributes

3. List of Teleservice categories and individual Teleservices

4. Description of individual Teleservices

5. Bearer capabilities supporting Teleservices

6. Possible further evolution phases of Teleservices in a GSM PLMN

Annex: Description of individual Teleservices

Original language: English

Number of pages: 23

0. Scope

The purpose of this Recommendation is to describe and define a recommended set of Teleservices to be supported by a GSM PLMN in connection with other networks as a basis for defining the network capabilities required.

Teleservices not included in this Recommendation should not be introduced unilateraly by a mobile network operator, if the provision of this service requires that the GSM signalling Recommendations are modified.

1. FRAMEWORK FOR DESCRIBING TELESERVICES SUPPORTED BY A GSM PLMN

Teleservices supported by a GSM PLMN are described by a number of attributes which are intended to be largely independant.

These attributes are described and defined in Recommendation GSM 02.01.

They are grouped into three categories:

- High layer attributes
- Low layer attributes (describing the Bearer capabilities which support the Teleservice).
    - information transfer attributes,
    - access attributes.
- General attributes

NOTE: Teleservices generally make use of underlying lower layer capabilities of Bearer Services as defined in Recommendation GSM 02.02. However, where Teleservices are provided by a single Administration, RPOA or other services provider, the combination of values of lower layer attributes applicable to specific Teleservices may not necessarily be identical to any of those identified for the Bearer Services appearing in Recommendation GSM 02.02.

Fig. 1 / GSM 02.03 shows the relationship between the different categories of services attributes, and their scope within a Teleservice.

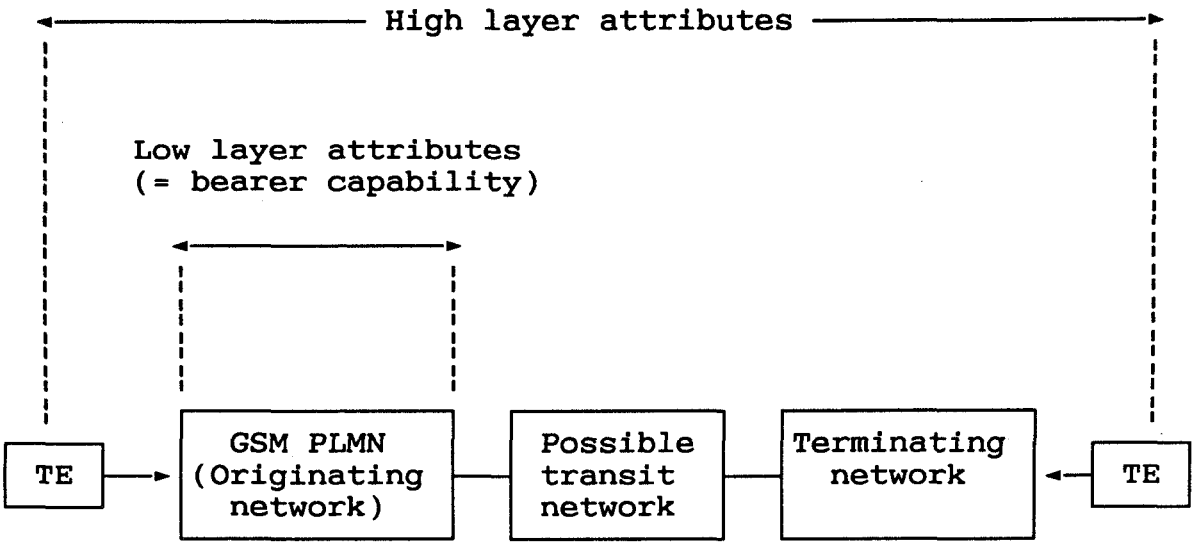

Fig 1 / GSM 02.03

Relationship between the categories of services attributes and their scope within a Teleservice

Note 1: A transit network may not exist.
Note 2: Communication may be established from both ends in principle.

2. LIST OF THE TELESERVICE ATTRIBUTES

Table 1 / GSM 02.03 gives the list of the attributes. For the definitions and possible values of these attributes, see Recommendation GSM 02.01.

1. High layer capabilities	1.1 Type of user information 1.2 Layer 4 protocol functions 1.3 Layer 5 " " 1.4 Layer 6 " " 1.5 Layer 7 " "	Dominant Teleservice attribute category Secondary attributes
2. Low layer capabilities (describing the Bearer capability which supports the Teleservice)	2.1 Information transfer 2.1.1 Information transfer capabilities 2.1.2 Information transf. mode 2.1.3 Information transf. rate 2.1.4 Structure 2.1.5 Establishment of communication 2.1.6 Communication configuration 2.1.7 Symmetry	↓↓ ↓↓ Individual services (in the category)
	2.2 Access (at access point 1,2,3) (Fig 2 / GSM 02.01) 2.2.1 Signalling access 2.2.2 Information access 2.3 Interworking 2.3.1 Terminating network type 2.3.2 National/international interworking 2.3.3 Interface of terminal equipment	Qualifying attributes ↓↓ ↓↓ Further specify the individual services
3. General	3.1 Supplementary services provided 3.2 Quality of service 3.3 Operational and commercial	

Table 1 / GSM 02.03: list of Teleservice attributes

3. LIST OF TELESERVICE CATEGORIES AND INDIVIDUAL TELESERVICES

Table 2 / GSM 02.03 presents a list of all Teleservices categories and of individual Teleservices and the associated dominant and secondary attributes. The recommended provision of services is described as essential (E1 to E3) and additional (A) as defined in rec. GSM 01.06, paragraph 2.

4. DESCRIPTION OF INDIVIDUAL TELESERVICES

The Annex contains a data sheet per Teleservice with all attributes and comments.

5. BEARER CAPABILITIES SUPPORTING TELESERVICES

According to Recommendation GSM 02.01 the Bearer Capability defines the technical features of a Teleservice as they appear to the user at the customer access point or an appropriate interface of a fixed network. The Bearer Capability is characterized by information transfer, access and interworking attributes. The same set of attributes as for a Bearer Service is used. A Bearer Capability is associated with every Teleservice.

6. POSSIBLE FURTHER EVOLUTION PHASES OF TELESERVICES IN A GSM PLMN

Possible further evolution phases according to the definition in GSM 01.06 could become necessary. For instance, speech coding procedures (half rate speech codec) will provide for the reduction of the bit rate for speech transmission and thus increase the network capacity.

Dominant attribute	Category of teleservice		Individual Teleservice			Recomm. provis.
Type of user information	No	Name	No	Name		
Speech	1	Speech transmission	11	Telephony		E1
			12	Emergency Calls		E1
Short message	2	Short message service	21	Short message MT/PP		E3
			22	Short message MO/PP		A
			23	Short message cell broadcast		FS
Data	3	MHS access	31	Advanced MHS access		A
Videotex	4	Videotex access	41	Videotex access profile 1		A
			42	Videotex access profile 2		A
			43	Videotex access profile 3		A
Text	5	Teletext transmission	51	Teletex		A
Facsimile	6	Facsim. transmission	61	Alternate speech and facsimile group 3	T NT	E2 A
			62	Automatic Facs. group 3	T NT	FS FS

Table 2 / GSM 02.03: Teleservice categories and Teleservices

Note: Direct access to private networks is foreseen by recommended provision A.

Annex

Description of individual Teleservices

Note 1: Interworking with Telex may be provided via teletex-telex- or other interworking functions.

Note 2: No message handling systems are provided within a GSM PLMN but there is an access service to such systems in fixed networks (Teleservice 31)

Note 3: Within the GSM PLMN the "Information transfer rate" attribute is not indicated, this is because the user may access the PLMN at either an "S" or "R" reference point. In addition, the "Information transfer rate" at other reference points within the PLMN assumed or otherwise may be different.

Teleservice 11, Telephony						
A T T R I B U T E S	1. HLC	1.1. Type of user information			speech	
		1.2. Layer 4 protocol functions			-	
		1.3. Layer 5 protocol functions			-	
		1.4. Layer 6 protocol functions			-	
		1.5. Layer 7 protocol functions			-	
	2. LLC	2.1. Inform. transfer	2.1.1. Information transfer capability		speech (digital representation)	
			2.1.2. Information transfer mode		circuit duplex synchronous	
			2.1.3. Information transfer rate			
			2.1.4. Structure		FS structure to be respected	
			2.1.5. Establishment of connection		demand MO MT	
			2.1.6. Communication configuration		point to point	
			2.1.7. Symmetry		biderectional symmetri	
		2.2. Access at MS	2.2.1. Signalling access		manual	
			2.2.2. Information access (access point 2, fig 2/GSM 02.01)	rate	FS	
				interface	FS	
		2.3. Inter-working	2.3.1. Visible network type		PSTN	ISDN
			2.3.2. National/Internat. interworking		international	international
			2.3.3. Interface of TE to terminating network		2 wire, analogue	S (B+B+D)
	3. Gen	3.1. Supplementary service provided				
		3.2. Quality of service			GSM 02.08	
		3.3. Operational and commercial				

Comment: This service provides the transmission of speech information and audible signalling tones of the PSTN/ISDN. In the GSM PLMN and the fixed network processing technique appropriate for speech such as analogue transmission, echo cancellation and low bit rate voice encoding may be used. Hence, bit integrity is not assured.

Note 1: Transparency for telephone signalling tones is provided.

Note 2: Transparency for voice band facsmile signals is not mandatory. (Appropriate bearer services see Fig 3 / GSM 02.02)

Note 3: Properties of transducers at both ends of a speech connection may be different.

Note 4: Transparency for end to end speech encryption is not mandatory. If a user needs to apply this technique an appropriate bearer service (table 3 / GSM 02.02) can be used

Note 5: The "plus-key" signals to the network to insert the international access code. This may be keyed directly or stored in a MS memory

Note 6: Transmission of DTMF in the mobile to fixed direction (e.g. for controlling voice mail boxes) during any time of an established call is provided.

Teleservice 12, Emergency calls						
A T T R I B U T E S	1. HLC	1.1. Type of user information			speech	
		1.2. Layer 4 protocol functions			-	
		1.3. Layer 5 protocol functions			-	
		1.4. Layer 6 protocol functions			-	
		1.5. Layer 7 protocol functions			-	
	2. LLC	2.1. Inform. transfer	2.1.1. Information transfer capability		speech (digital representation)	
			2.1.2. Information transfer mode		circuit duplex synchronous	
			2.1.3. Information transfer rate			
			2.1.4. Structure		FS structure to be respected	
			2.1.5. Establishment of connection		demand MO	
			2.1.6. Communication configuration		point to point	
			2.1.7. Symmetry		biderctional symmetri	
		2.2. Access at MS	2.2.1. Signalling access		FS	
			2.2.2. Information access (access point 2, fig 2/GSM 02.01)	rate	FS	
				interface	FS	
		2.3. Inter-working	2.3.1. Visible network type		PSTN, GSM PLMN	ISDN, GSM PLMN
			2.3.2. National/Internat. interworking		national	national
			2.3.3. Interface of TE to terminating network		FS	FS
	3. Gen	3.1. Supplementary service provided			none (see note 3)	
		3.2. Quality of service			GSM 02.08	
		3.3. Operational and commercial				

Comments:

1) A standardized access method throughout all GSM PLMNs is mandatory. In addition national emergency call numbers of PSTN/ISDN must be usable from MS.

2) It shall be an option of the network operator whether to accept emergency calls coming from mobile stations which do not transmit an IMSI or a TMSI.

3) Emergency calls supersede all constraints imposed by supplementary services or mobile station features used for other Tele or Bearer services. The lock state of the MS is overridden by the SOS-procedure. From the MS' point of view an Emergency Call shall continue if the SIM is removed during the call without following the normal procedure.

4) Emergency calls will be routed to the emergency services in accordance with national regulations.

5) In order to help identifying callers in cases of misuse databases in the GSM PLMN may be accessed to retrieve the identity of the calling MS.

Teleservice 21, Short Message MT point to point					
A	1. HLC	1.1. Type of user information			short message, ≤ 160 characters
		1.2. Layer 4 protocol functions			
		1.3. Layer 5 protocol functions			
		1.4. Layer 6 protocol functions			see GSM 03.40
T		1.5. Layer 7 protocol functions			
T	2. LLC	2.1. Inform. transfer	2.1.1. Information transfer capability		unrestricted digital informat.
			2.1.2. Information transfer mode		packet connectionless
			2.1.3. Information transfer rate		not applicable
R			2.1.4. Structure		service data unit integrity
			2.1.5. Establishment of connection		demand MT
I			2.1.6. Communication configuration		point to point
			2.1.7. Symmetry		unidirectional
B		2.2. Access at MS	2.2.1. Signalling access		
U			2.2.2. Information access (access point 2, fig 2/GSM 02.01)	rate	not applicable
				interface	
T		2.3. Inter-working	2.3.1. Visible network type		
			2.3.2. National/Internat. interworking		
E			2.3.3. Interface of TE to terminating network		
S	3. Gen	3.1. Supplementary service provided			none
		3.2. Quality of service			GSM 02.08
		3.3. Operational and commercial			

Comments:

1) This service provides the transmission of a short message from a message handling system in a fixed network (including paging system) to a mobile station.

2) After reception an acknowledgement message should be sent back.

Teleservice 22, Short Message MO point to point					
A T T R I B U T E S	1. HLC	1.1. Type of user information			short message, ≤ 160 characters
		1.2. Layer 4 protocol functions			
		1.3. Layer 5 protocol functions			
		1.4. Layer 6 protocol functions			see GSM 03.40
		1.5. Layer 7 protocol functions			
	2. LLC	2.1. Inform. transfer	2.1.1. Information transfer capability		unrestricted digital informat.
			2.1.2. Information transfer mode		packet connectionless
			2.1.3. Information transfer rate		not applicable
			2.1.4. Structure		service data unit integrity
			2.1.5. Establishment of connection		demand MO
			2.1.6. Communication configuration		point to point
			2.1.7. Symmetry		unidirectional
		2.2. Access at MS	2.2.1. Signalling access		
			2.2.2. Information access (access point 2, fig 2/GSM 02.01)	rate	not applicable
				interface	
		2.3. Inter-working	2.3.1. Visible network type		
			2.3.2. National/Internat. interworking		
			2.3.3. Interface of TE to terminating network		
	3. Gen	3.1. Supplementary service provided			
		3.2. Quality of service			GSM 02.08
		3.3. Operational and commercial			

Comments:

1) This service provides the transmission of a short message from a mobile station to a message handling system in a fixed network (incl. paging system). After reception an acknowledgement message is sent back.

2) Information from the following sources at the MS might be transmitted: a prerecorded message in a store, a number from the dialling key pad, an information from an (external) keyboard or terminal equipment connected to the MSCU.

Teleservice 23, Short Message transmission cell broadcast					
A	1. HLC	1.1. Type of user information			short message, ≤93 char. (note)
		1.2. Layer 4 protocol functions			
		1.3. Layer 5 protocol functions			
		1.4. Layer 6 protocol functions			see GSM 03.41
T		1.5. Layer 7 protocol functions			
T	2. LLC	2.1. Inform. transfer	2.1.1. Information transfer capability		unrestricted digital informat.
			2.1.2. Information transfer mode		packet connectionless
			2.1.3. Information transfer rate		not applicable
R			2.1.4. Structure		service data unit integrity
			2.1.5. Establishment of connection		demand MT
I			2.1.6. Communication configuration		point to multipoint
			2.1.7. Symmetry		
B		2.2. Access at MS	2.2.1. Signalling access		
U			2.2.2. Information access (access point 2, fig 2/GSM 02.01)	rate	not applicable
				interface	
T		2.3. Inter-working	2.3.1. Visible network type		
			2.3.2. National/Internat. interworking		
E			2.3.3. Interface of TE to terminating network		
S	3. Gen	3.1. Supplementary service provided			
		3.2. Quality of service			GSM 02.08
		3.3. Operational and commercial			

Comment: This service provides the transmission of a short message from a message handling system in a fixed network (incl. paging system) to all mobile stations in the area of a BS. There is no acknowledgement message after reception.

Note: GSM 03.41 provides up to 15 concatenated "pages" of up to 93 characters each.

ANNEX to the datasheet of teleservice 21, "Short message MT/PP", teleservice 22 "Short message MO/PP" and teleservice 23 "Cell broadcast short messages"

1. INTRODUCTION

The purpose of this Annex is to describe the short message teleservice.

Three different types of short messages are defined, namely short message MT/PP (Mobile Terminated/Point to Point), short message MO/PP (Mobile Originated/Point to Point) and Cell Broadcast short messages.

2. DEFINITION OF THE SHORT MESSAGE SERVICE MT/PP and MO/PP

For both mobile originated and mobile terminated services the Service Centre acts as store and forward centre. The Service Centre is functionally seperate from the PLMN although this does not preclude an integrated implementation. More than one service centre may be connected to a PLMN. Messages may be input to the service centre from a fixed network customer by means of a suitable telecommunications service either from the fixed network, e.g. speech, telex, facsimile, etc or from a mobile network customer. The list is not intended to be comprehensive and it is entirely open to the service centre provider what telecommunication services it supports. The service centre shall then reformat the message into that provided by the short message service, for delivery to the mobile station.

For mobile originated SMS calls the SMT formats the message into that used by the SMS service and sends to the service centre. In principle this message may be intended for a subscriber on the fixed network or for another mobile subscriber. For the message to another mobile subscriber the service centre should deliver as described in this chapter.

The messages are limited to a length of 160 characters.

The originator does not need to know the location of the mobile subscriber to whom he wants to send a message. The message is addressed to the recipient's Directory Number.

As a part of the basic service for both MT and MO, an acknowledgement will be provided on a message by message basis. This acknowledgement (delivery acknowledgement) indicates that the message has been correctly received and stored at the receiving station (MS of SC). It does not indicate whether it has been read.

All GSM point to point short messages are either to or form the service centre. A message from one mobile station to another must pass through a service centre. This case is effectively an

MO and MT message together. The two transactions are separate, though clearly related. The Mobile Originator will receive an acknowledgement the the SC as received his message.

Point to Point messages may be sent or received when the MS is engaged on a call (voice or data), or in idle mode. However, messages which overlap the boundary of such a call, or during a handover, may be lost, in which case they will be sent again.

The accounting between the SC and PLMN if applicable is for agreement between those parties.

The originator of a short message may notify the SC of an expiry time after which the message is no longer of value and may be deleted by the SC. During the validation period of the message, the SC will try to deliver the message. After the expiry date the SC will take no further step to deliver the message, but its status may be kept by the SC to enable the originator to enquire the result. If the originator of the short message does not request any expiry time a standard value, e.g. 24 hours, is used.

If the MS Message Store is full, the Message Store Overflow indicator is activated, and any further messages received will not be accepted. An appropriate specific non-acknowledgement message shall be returned.

Note: The implications of Full Message Store require Further Study.

3. Definition of the cell broadcast short message

The cell broadcast is a Teleservice which enables an Information Provider to submit short messages for broadcasting to a specified area within the PLMN.

The cell broadcast service is characterized by the follwing aspects:

(i) No acknowledgement is sent from the MS.

(ii) The cell broadcast message is sent on control channels in a limited area, defined by the originator of the message, by agreement with the PLMN.

(iii) An identifier is associated with each message. This identifier is received by the MS and used by the short message function of the MS not to store broadcast messages which are not wanted or which have already been received [or for which there is no subscription entitlement - for further study].

(iv) The charging aspects of cell broadcast mode require Further Study. If a subscription entitlement is required, this may have to be stored in the SIM.

(v) Reception is only possible in idle mode.

(vi) Generally, cell braodcast messages will be sent continuously, so that all such messages are sent in turn, and then repeated. The cycle time will need to be short enough for important messages to be received by travellers moving through a group of cells.

(viii) Cell broadcast messages are MT only. The origination of these messages is outside the scope of GSM.

(vii) The question of encryption of Cell broadcast messages is for further study.

(ix) The maximum length of each cell broadcast message will be 93 characters. GSM 03.41 describes a concatenation mechanism which allows up to 15 of these 93 character messages treated as segments of a longer message. These segments are then refered to as "pages".

Teleservice 31, Advanced MHS access					
A T T R I B U T E S	1. HLC	1.1. Type of user information			X.400 messages
		1.2. Layer 4 protocol functions			X.224
		1.3. Layer 5 protocol functions			X.225
		1.4. Layer 6 protocol functions			X.400 series
		1.5. Layer 7 protocol functions			X.400 series
	2. LLC	2.1. Inform. transfer	2.1.1. Information transfer capability		unrestricted digital informat.
			2.1.2. Information transfer mode		
			2.1.3. Information transfer rate		
			2.1.4. Structure		
			2.1.5. Establishment of connection		
			2.1.6. Communication configuration		
			2.1.7. Symmetry		
		2.2. Access at MS	2.2.1. Signalling access		
			2.2.2. Information access (access point 2, fig 2/GSM 02.01)	rate	
				interface	
		2.3. Inter-working	2.3.1. Visible network type		
			2.3.2. National/Internat. interworking		
			2.3.3. Interface of TE to terminating network		
	3. Gen	3.1. Supplementary service provided			
		3.2. Quality of service			GSM 02.08
		3.3. Operational and commercial			

Comment: This service provides message submission to, delivery from and storage in a public MHS (X.400)

Teleservice 41, Videotex access profile 1					
A T T R I B U T E S	1. HLC	1.1. Type of user information			videotex
		1.2. Layer 4 protocol functions			
		1.3. Layer 5 protocol functions			
		1.4. Layer 6 protocol functions			CEPT T/CD 6.1 profile 1
		1.5. Layer 7 protocol functions			-- " --
	2. LLC	2.1. Inform. transfer	2.1.1. Information transfer capability		unrestricted digital informat.
			2.1.2. Information transfer mode		circuit duplex asynchronous
			2.1.3. Information transfer rate		
			2.1.4. Structure		service data unit integrity
			2.1.5. Establishment of connection		demand MO
			2.1.6. Communication configuration		point to point
			2.1.7. Symmetry		biderctional assymetric
		2.2. Access at MS	2.2.1. Signalling access		manual or automatic
			2.2.2. Information access (access point 2, fig 2/GSM 02.01)	rate	1200/75 bit/s
				interface	V.23 DTE/DCE interface
		2.3. Inter-working	2.3.1. Visible network type		PSTN FS
			2.3.2. National/Internat. interworking		national (see comment 2)
			2.3.3. Interface of TE to terminating network		
	3. Gen	3.1. Supplementary service provided			
		3.2. Quality of service			GSM 02.08
		3.3. Operational and commercial			

Comments:

1) This teleservice can be used by a MS equipment with a Videotex terminal equipment (Vtx TE) using the same profile as the GSM PLMN teleservice. Thus Videotex services in the Videotex system of the PLMN's country can be used.

2) Videotex systems in other countries (even with other profiles) may be accessed via Videotex interworking in the fixed networks if this is provided.

3) An internationally roaming MS may access its home Vtx network by a dialled connection via PLMN and PSTN (see Fig. 4/GSM 02.03). Further study is required.

4) Subscription questions need further study.

Teleservice 42, Videotex access profile 2					
A T T R I B U T E S	1. HLC	1.1. Type of user information			videotex
		1.2. Layer 4 protocol functions			
		1.3. Layer 5 protocol functions			
		1.4. Layer 6 protocol functions			CEPT T/CD 6.1 profile 2
		1.5. Layer 7 protocol functions			-- " --
	2. LLC	2.1. Inform. transfer	2.1.1. Information transfer capability		unrestricted digital informat.
			2.1.2. Information transfer mode		circuit duplex asynchronous
			2.1.3. Information transfer rate		
			2.1.4. Structure		service data unit integrity
			2.1.5. Establishment of connection		demand MO
			2.1.6. Communication configuration		point to point
			2.1.7. Symmetry		biderctional assymetric
		2.2. Access at MS	2.2.1. Signalling access		manual or automatic
			2.2.2. Information access (access point 2, fig 2/GSM 02.01)	rate	1200/75 bit/s
				interface	V.23 DTE/DCE interface
		2.3. Inter-working	2.3.1. Visible network type		PSTN FS
			2.3.2. National/Internat. interworking		national (see comment 2)
			2.3.3. Interface of TE to terminating network		
	3. Gen	3.1. Supplementary service provided			
		3.2. Quality of service			GSM 02.08
		3.3. Operational and commercial			

Comments:

1) This teleservice can be used by a MS equipment with aVideotex terminal euqipment (Vtx TE) using the same profile as the GSM PLNN teleservice. Thus Videotex services in the Videotex system of the PLMN's country can be used.

2) Videotex systems in other countries (even with other profiles) may be accessed via Videotex interworking in the fixed networks if this is provided.

3) An internationally roaming MS may access its home Vtx network by a dialled connection via PLMN and PSTN (see Fig. 4/GSM 02.03). Further study is required.

4) Subscription questions need further study.

Teleservice 43, Videotex access profile 3					
A T T R I B U T E S	1. HLC	1.1. Type of user information			videotex
		1.2. Layer 4 protocol functions			
		1.3. Layer 5 protocol functions			
		1.4. Layer 6 protocol functions			CEPT T/CD 6.1 profile 3
		1.5. Layer 7 protocol functions			-- " --
	2. LLC	2.1. Inform. transfer	2.1.1. Information transfer capability		unrestricted digital informat.
			2.1.2. Information transfer mode		circuit duplex asynchronous
			2.1.3. Information transfer rate		
			2.1.4. Structure		service data unit integrity
			2.1.5. Establishment of connection		demand MO
			2.1.6. Communication configuration		point to point
			2.1.7. Symmetry		biderctional assymetric
		2.2. Access at MS	2.2.1. Signalling access		manual or automatic
			2.2.2. Information access (access point 2, fig 2/GSM 02.01)	rate	1200/75 bit/s
				interface	V.23 DTE/DCE interface
		2.3. Inter-working	2.3.1. Visible network type		PSTN FS
			2.3.2. National/Internat. interworking		national (see comment 2)
			2.3.3. Interface of TE to terminating network		
	3. Gen	3.1. Supplementary service provided			
		3.2. Quality of service			GSM 02.08
		3.3. Operational and commercial			

Comments:

1) This teleservice can be used by a MS equipment with a Videotex terminal euqipment (Vtx TE) using the same profile as the GSM PLNN teleservice. Thus Videotex services in the Videotex system of the PLMN's country can be used.

2) Videotex systems in other countries (even with other profiles) may be accessed via Videotex interworking in the fixed networks if this is provided.

3) An internationally roaming MS may access its home Vtx network by a dialled connection via PLMN and PSTN (see Fig. 4/GSM 02.03). Further study is required.

4) Subscription questions need further study.

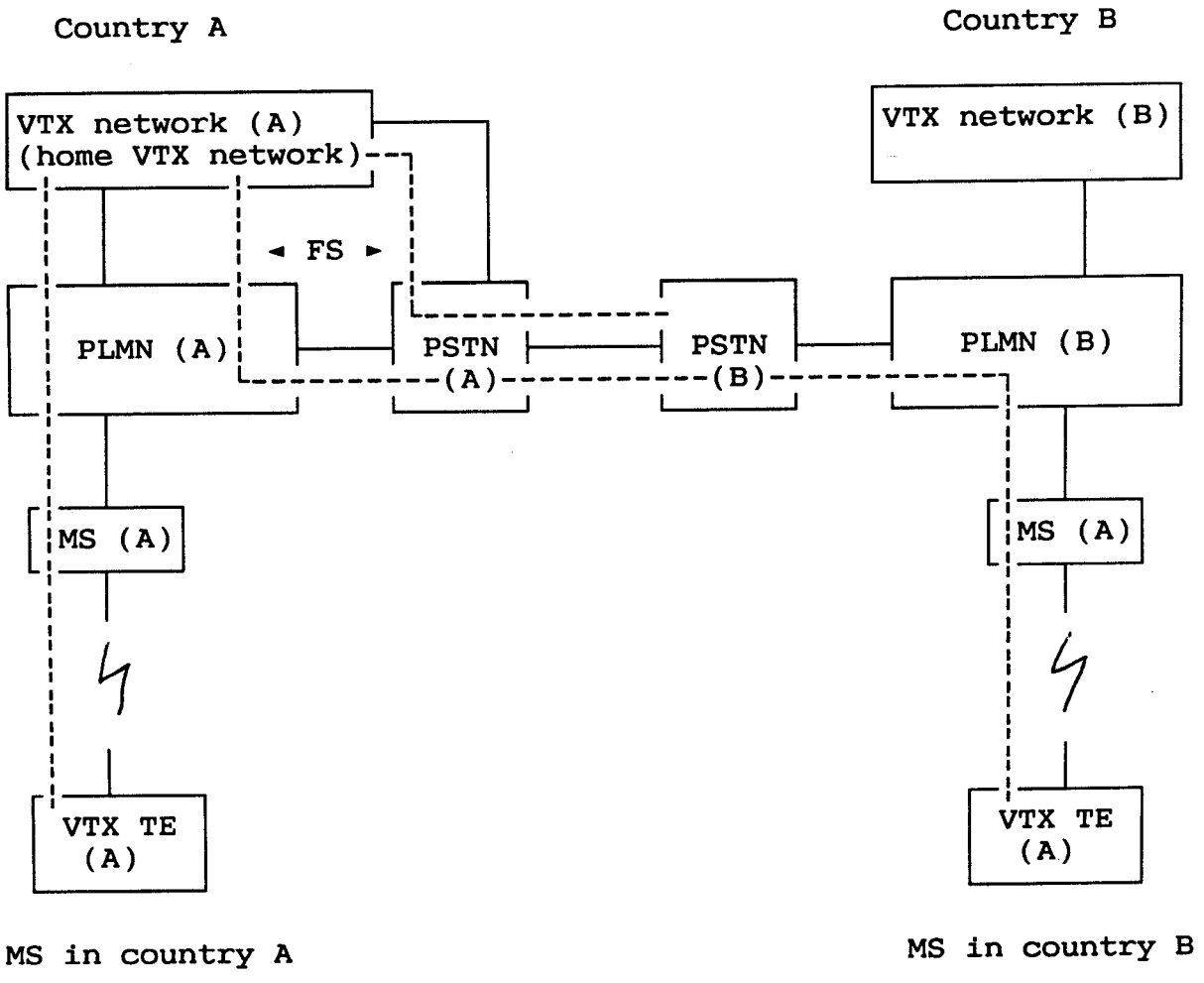

Fig. 4 / GSM 02.03. Usage of Videotex access service (Vtx in country A and B may have the same or a different profile)

Teleservice 51, Teletex					
A	1. HLC	1.1. Type of user information			Text
		1.2. Layer 4 protocol functions			T.70 CCITT — T/TE 07.01 CEPT
		1.3. Layer 5 protocol functions			T.62 CCITT — T/TE 07.01 CEPT
		1.4. Layer 6 protocol functions			T.62 CCITT — T/TE 07.01 CEPT
T		1.5. Layer 7 protocol functions			
T	2. LLC	2.1. Inform. transfer	2.1.1. Information transfer capability		unrest. dig., 3.1 kHz Ex PLMN
			2.1.2. Information transfer mode		circuit/packet duplex synchr.
			2.1.3. Information transfer rate		
R			2.1.4. Structure		service data unit integrity
			2.1.5. Establishment of connection		demand MO/MT
I			2.1.6. Communication configuration		point to point
			2.1.7. Symmetry		bidirectional symmetric
B		2.2. Access at MS	2.2.1. Signalling access		X.32/X.31 case A or X.31 case B
U			2.2.2. Information access (access point 2, fig 2/GSM 02.01)	rate	2400, 4800, 9600 bit/s
				interface	X.21, X.21bis, V-series
T		2.3. Inter-working	2.3.1. Visible network type		PSPDN
			2.3.2. National/Internat. interworking		international
E			2.3.3. Interface of TE to terminating network		X.21, X21bis, V-series
S	3. Gen	3.1. Supplementary service provided			Call Forwarding (note)
		3.2. Quality of service			GSM 02.08
		3.3. Operational and commercial			

Note: Call Forwarding is a requirement when a TDS function is provided

Comments:

1) Telex access may be provided via Teletex/Telex or other interworking functions within the fixed networks.

2) If a network operator wishes to guarantee that Teletex documents can be received continuously, a Teletex Document Store (TDS) is required. The MT call will then be automatically forwarded to such a TDS, whenever the connection to the Ttx MS cannot be established. A guideline for such a store is given in Appendix 1 of GSM 03.44.

It is at the PLMN operator's descretion, where the TDS is located (e.g. in the HPLMN or in a fixed network) and how to access it.

The TDS acts instead of the terminal (as being the terminal itself) and is therefore responsible for the successful delivery of the document(s) to the Ttx-TE. The means for delivery of the Teletex document to the mobile subscriber is up to negotiation between the PLMN operator and the TDS operator.

Teleservice 61, Alternate speech and facsimile group 3							
A T T R I B U T E S	1. HLC	1.1. Type of user information			facsimile		
		1.2. Layer 4 protocol functions			Procedures according to CCITT		
		1.3. Layer 5 protocol functions			recommendation T.30.		
		1.4. Layer 6 protocol functions			Transmission of pages according		
		1.5. Layer 7 protocol functions			to CCITT rec. T.4.		
	2. LLC	2.1. Inform. transfer	2.1.1. Information transfer capability		alternate speech/group 3 fax		
			2.1.2. Information transfer mode		circuit duplex synchronous		
			2.1.3. Information transfer rate				
			2.1.4. Structure		service data unit integrity		
			2.1.5. Establishment of connection		demand MO MT (note 2)		
			2.1.6. Communication configuration		point to point		
			2.1.7. Symmetry		bidirectional symmetri		
		2.2. Access at MS	2.2.1. Signalling access				
			2.2.2. Information access (access point 2, fig 2/GSM 02.01)	rate	not applicable		
				interface	2 wire, analogue		
		2.3. Inter-working	2.3.1. Visible network type		PSTN	ISDN	GSM PLMN
			2.3.2. National/Internat. interworking		international		
			2.3.3. Interface of TE to terminating network		2 wire analogue		
	3. Gen	3.1. Supplementary service provided			FS		
		3.2. Quality of service			GSM 02.08		
		3.3. Operational and commercial					

Comments:

1) This Teleservice allows the connection of CCITT group 3 fax apparatus (send and/or receive) to the mobile stations of a GSM PLMN. Facsimile connections may be established to/from group 3 apparatus in the PSTN, ISDN or GSM PLMN. Connection to/from other types of facsimile apparatus in the fixed network might be ossible using the appropriate inter-working functions of PSTN and/or ISDN if provided.

2) The different possible operating methods (combining manual and/or automatic at the sender and receiver, see CCITT Rec. T.30, table 1) need further study. This question is related to a change of the teleservice of the GSM PLMN in a connection.

3) A high quality of service even under bad radio conditions and/or in connection to/from moving vehicles is required.

4) It is intended that where either the speech or data service requires the use of a full rate channel and the other service requires the use of a half rate channel will be reserved for the duration of the call, with a half rate channel remaining unused for the period where the service only requires a half rate channel. User information is transferred over a Bm or Lm channel; signalling is provided over a Dm channel.

Teleservice 62, Automatic facsimile group 3						
A T T R I B U T E S	1. HLC	1.1. Type of user information			facsimile	
		1.2. Layer 4 protocol functions			Procedures according to CCITT recommendation T.30. Transmission of pages according to CCITT rec. T.4.	
		1.3. Layer 5 protocol functions				
		1.4. Layer 6 protocol functions				
		1.5. Layer 7 protocol functions				
	2. LLC	2.1. Inform. transfer	2.1.1. Information transfer capability		Facsimile group 3	
			2.1.2. Information transfer mode		circuit duplex synchronous	
			2.1.3. Information transfer rate			
			2.1.4. Structure		service data unit integrity	
			2.1.5. Establishment of connection		demand MO MT	
			2.1.6. Communication configuration		point to point	
			2.1.7. Symmetry		bidirectional symmetri	
		2.2. Access at MS	2.2.1. Signalling access			
			2.2.2. Information access (access point 2, fig 2/GSM 02.01)	rate	not applicable	
				interface	2 wire, analogue (note 5)	
		2.3. Inter-working	2.3.1. Visible network type		PSTN	ISDN / GSM PLMN
			2.3.2. National/Internat. interworking		international	
			2.3.3. Interface of TE to terminating network		2 wire analogue	
	3. Gen	3.1. Supplementary service provided			FS	
		3.2. Quality of service			GSM 02.08	
		3.3. Operational and commercial				

Notes:

1) This teleservice supports a Facsimile Group 3 Autocalling/Autoanswering mode only.

2) This teleservice allows connection of CCITT group 3 fax apparatus to and from the mobile stations of a GSM PLMN. Facsimile connections may be established to and from group 3 apparatus in the PSTN, ISDN or GSM PLMN.

3) This teleservice may be provided for mobile terminated calls on GSM PLMNs which use the multinumbering interworking solution (multiple MSISDNs) for PSTN/ISDN originated traffic (see GSM 09.07).

4) A high quality of service even under bad radio conditions and/or in connection to/from moving vehicles is required.

5) Alternative digital access via a V.24 interface