3GPP TSG RAN Rel-19 workshop
Taipei, June 15 - 16, 2023

RWS-230466

Source: Apple
Agenda Item: 5

# Views on Rel-19 XR Enhancements

Apple

# Rel-18 XR | Observations

## Scope of Rel-18 XR:

- **XR-Awareness:** Making RAN become aware of XR traffic characteristics, to enable more efficient resource allocation and DRX configurations.
- **XR-Power Saving:** DRX enhancements to cope with periodic XR traffics with non-integer frame rates.
- **XR-Capacity Improvements:** Mechanisms to enhance resource efficiency.
  - Multi-PUSCH Configured Grant
  - BSR enhancement
  - Packet Discarding

**Rel-18 XR focusses on Efficiency, but not particularly on User Experiences**

## What we can do to enhance User Experiences?

- **Multi-Flows & DL/UL coordination:** The XR user experiences can be enhanced with proper coordinations among multiple traffic flows in the same or different directions.
- **Further Power Saving:** UE power saving is critical for XR user experience, but Rel-18 scope is rather narrow.
- **Minimisation of Packet Discarding:** Any packet discarding may result in degradation of user experiences from application perspective.
- **XR in NR-U:** To provide ubiquitous XR user experiences, operations in environments where only NR unlicensed spectrum is available should be considered.
- **CSI acquisition:** align CSI acquisition including measurements and reporting for XR capacity and UE power saving.

**NR Enhancements in Rel-19 should target to truly deliver optimised XR User Experiences**

# Rel-19 XR Topic | Multiple DRX Configurations for Multi-Flows

- **Discussion:**
  - XR application specific traffic characteristics:
    - Multiple data flows with different QoS requirements for both DL and UL
      - 3GPP SA4 study has revealed the presence of multiple data flows with different QoS requirements for each direction for XR conservational.
      - Bidirectional traffic with multiple data flows is key to enable infotainment and productivity XR applications
    - Quasi-periodic traffic arrival for each data flow
      - From 3GPP SA4 study, each data flow is either periodic or quasi-periodic.
  - XR devices need to cope with multiple co-existing traffic flows with very different periodicities:
    - For example, video frame rate may be 60 FPS (16.67ms) while audio stream periodicity may be 10ms.
  - It is inefficient and not flexible enough to support multiple traffic flows concurrently with only one active DRX configuration.

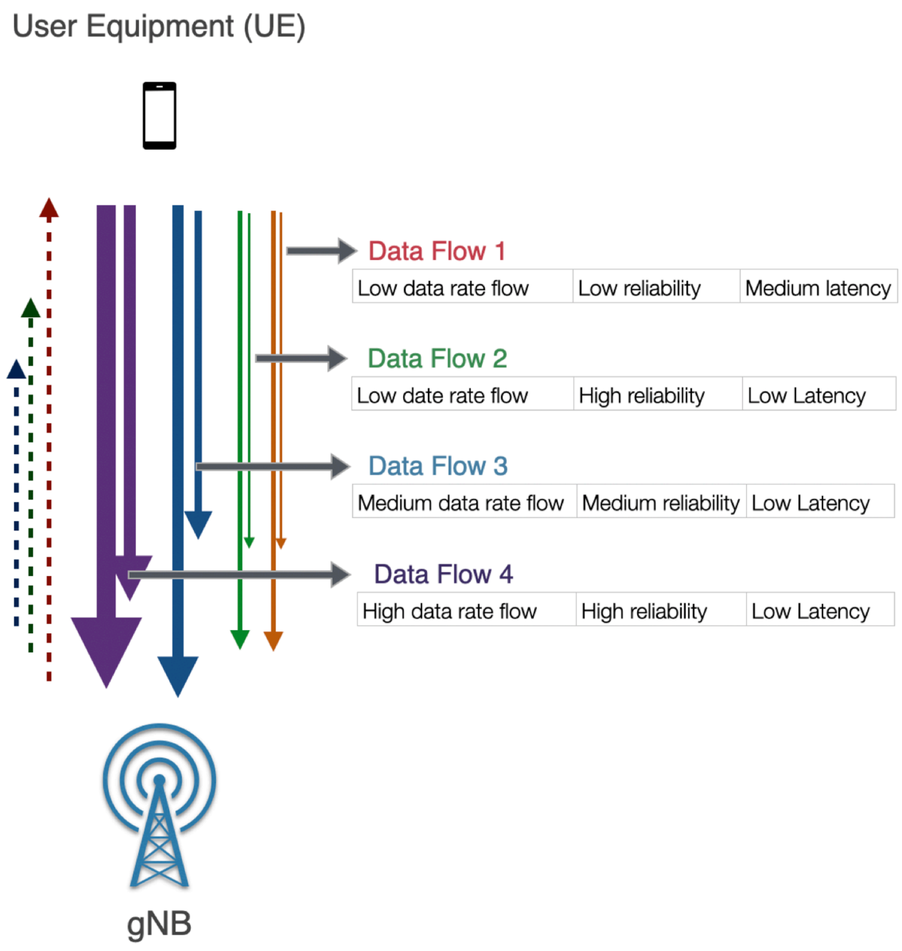


- **Proposal:**
  - **Rel-19 XR can be enhanced to support multiple active DRX configurations.**

# Rel-19 XR Topic | Optimisation of DRX Active Duration

- **Discussion:**
  - Rel-18 has discussed “Retransmission-Less CG” to disable DRX HARQ timer for transmissions relating uplink pose information, in order to minimise UE active time.
  - This can be made more flexible by tailoring the active time interval in accordance to the QoS requirement of data to be carried in each uplink transmission.

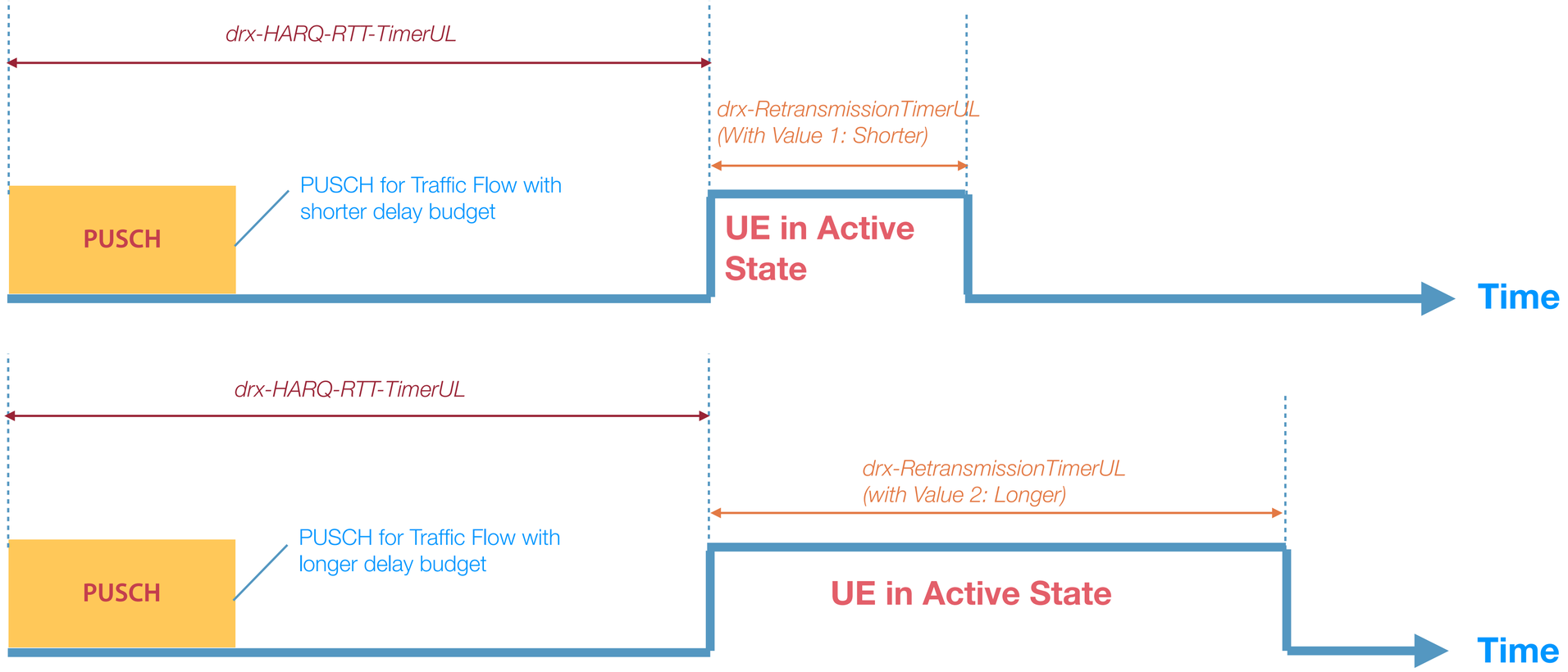


- **Proposal**:
  - **Rel-19 XR can be enhanced to QoS/Grant dependent DRX behaviour, in order to optimise UE power saving.**

# Rel-19 XR Topic | Activity Alignments of Multiple Flows

- **Discussion:**
  - Multiple traffic flows co-exist for XR services, such as video and audio.
  - It is beneficial if transmission of these traffic flows can be tightly synchronised because:
    - Synchronized delivery of multi-modal traffic flows can optimise user experience, and
    - UE power consumption can be reduced significantly via timing-alignment of UE activities for different traffic flows.
  - Both user experiences and UE power efficiency can be improved if resources for multiple traffic flows are clustered together in time domain.

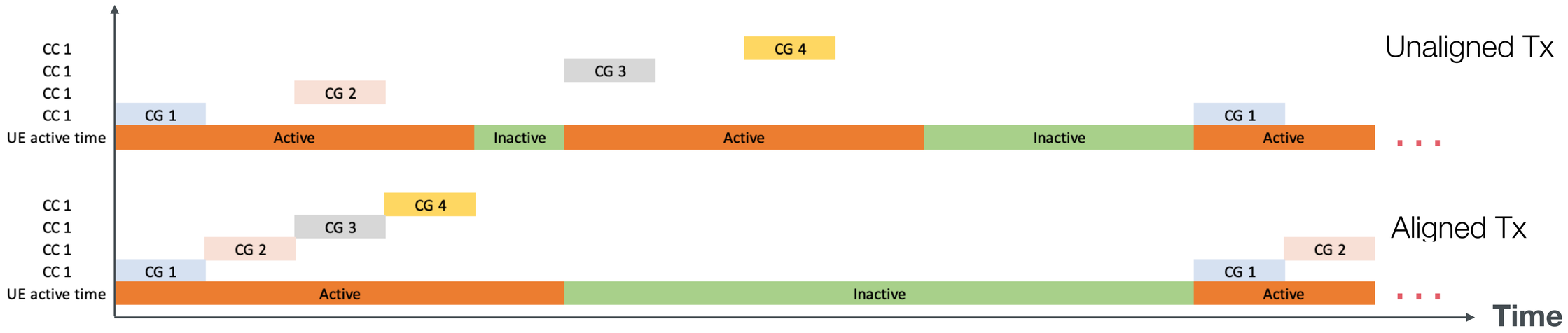


- **Proposal:**
  - **Rel-19 XR can be enhanced to support mechanisms for time alignment of transmission associating to different traffic flows.**

# Rel-19 XR Topic | Minimisation of Round-Trip Latency

- **Discussion:**
  - Smooth interaction between the user activity and the content is a key to provide truly immersive experiences.
  - This requires very tight coordination between mutually dependent UL/DL flows :
    - For example, the XR server hosted in the network needs to process pose/control information sent in UL by a UE, and renders the corresponding media content, which should be transmitted in DL immediately.
  - SA2 has examined solutions based on uplink-downlink transmission coordination for this issue.
  - In Rel-19, how to minimise such round trip delay in the Uu interface can be further studies by RAN to further enhance XR user experiences.

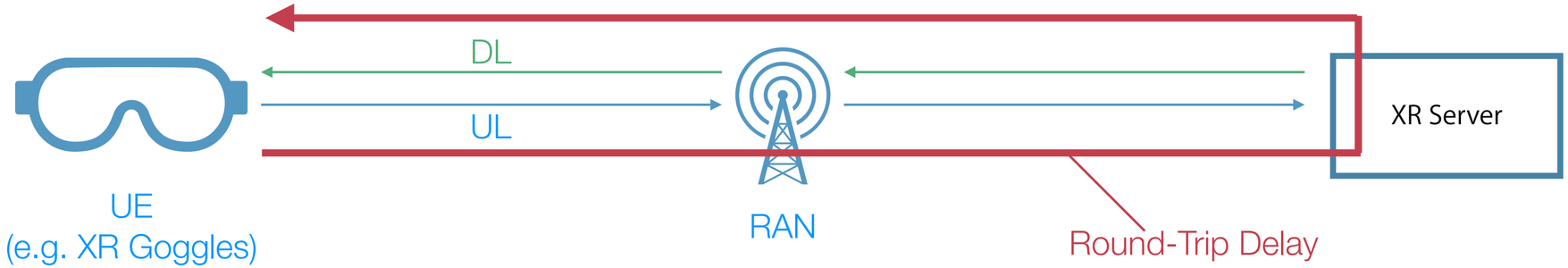


- **Proposal:**
  - **Rel-19 XR can be enhanced to minimise round trip delay time between mutually dependent UL and DL traffic flows.**

# Rel-19 XR Topic | Delay-Aware Operations to Minimise Discarding

- **Discussion:**
  - Based on Rel-18, discarding of a whole application data unit (e.g. PDU Set) can be triggered by any loss of packet in a PDU Set (e.g. not successfully delivered within the delay budget), and/or when the network becomes congested. Packet discarding becomes a common case for Rel-18 XR.
  - However, any packet discarding can actually result in degradation of user experience, and therefore not desirable from application point of view.
  - Buffer delay information reporting (to be defined in Rel-18) may facilitate delay-aware scheduling. However, there is also some latency for reporting and corresponding network reaction.
  - This is desirable if the UE can autonomously trigger some actions to avoid discarding of a buffered PDU Set when it becomes critical (e.g. when the remaining time till the delivery deadline of this PDU Set drops below a threshold).

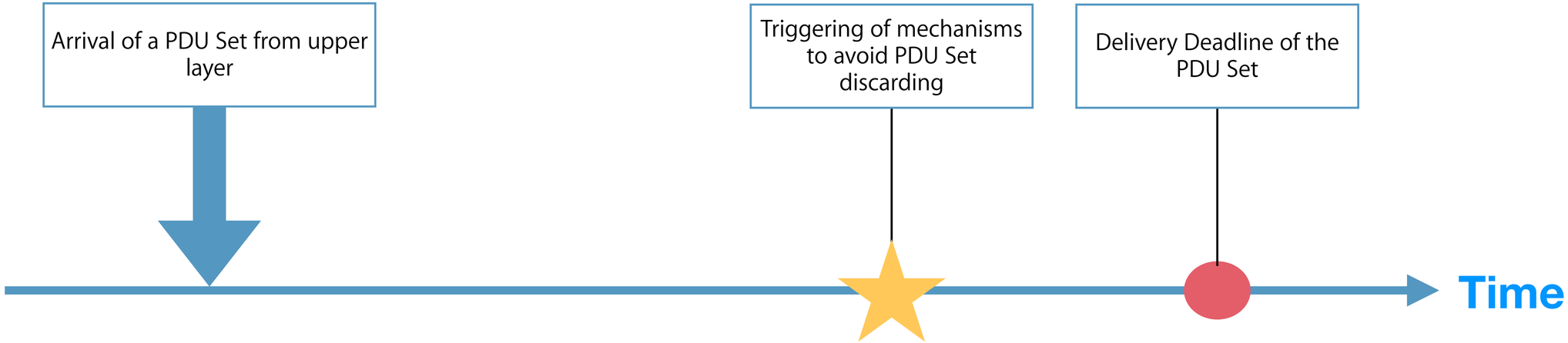


- **Proposal:**
  - **Rel-19 XR can be enhanced to enable delay-aware UE operations to minimise packet discarding.**

# Rel-19 XR Topic | XR in Unlicensed Band Operation

- **Discussion:**
  - To make sure XR services can be provided in any deployment scenarios, some considerations of how XR operates in unlicensed spectrum can be discussed. For examples:
    - Rel-18 introduces Multi-PUSCH Configured Grant along with dynamic indication of unused transmission occasions . Whether the Rel-18 scheme can be compatible with NR-U configured grants should be investigated in Rel-19.
    - Autonomous retransmission mechanisms and HARQ process selection for configured grants in NR-U can be adapted to accommodate XR features.

- **Proposal:**
  - **Rel-19 XR can be enhanced to accommodate XR features in unlicensed band, if needed.**

# Rel-19 XR Topic | CSI acquisition

- **Discussion:**
  - CSI measurement and reporting may not be aligned with XR periodicity, which can lead to unnecessary UE power consumption and capacity loss as interference measurement may not reflect interference the XR traffic really suffers from.

- **Proposal:**
  - **Rel-19 XR can be enhanced to optimise/enable CSI measurement and reporting aligned with XR periodicity.**

# Conclusions | Potential Objectives for Rel-19 XR

- **Potential Rel-19 WI Objectives:**
  1. Specify multiple active DRX configurations to support multiple XR traffic flows. [RAN2, RAN1]
  2. Specify adaptive DRX configurations based on UL traffic requirements [RAN2]
  3. Specify mechanisms to support transmission alignment among resources for different traffic flows [RAN2]
  4. Specify mechanisms to minimise round trip delay time between mutually dependent UL and DL transmissions [RAN2]
  5. Specify buffer delay-aware UE operations to minimise PDU Set discarding [RAN2]
  6. Specify mechanisms to accommodate XR features in unlicensed band operation, if needed [RAN2, RAN1]
  7. Specify CSI measurement and reporting aligned with XR periodicity [RAN1, RAN2]

TM and © 2023 Apple Inc. All rights reserved.