Smarter technology for all

3GPP TSG RAN Release 19 workshop
Taipei, June 15 –16, 2023

RWS-230397

Agenda Item:	5
Source:	Lenovo
Document for:	Discussion

Study further enhancement to Time Sensitive Communication

2023 Lenovo. All rights reserved.

NR Sidelink Evolution

NR SL Rel-16	NR SL Rel-17	NR SL Evo Rel-18	NR SL Evo Rel-19
▪ 5G V2X Architecture ▪ KPI: 3ms@99.99% ▪ FR1 ▪ OFDM ▪ SCS: 15kHz, 30kHz and 60kHz SCS ▪ Mode 1 + Mode 2 ▪ UniCast/GroupCast/ Broadcast ▪ HARQ & CSI reporting	▪ V2X Relay (L2 & L3) ▪ V2X Remote UE to NW Relay ▪ Discovery mechanism ▪ Mode 2: Inter-UE coordination schemes ▪ Mode 2: Partial Sensing for VRU ▪ DRX	▪ SL FR2: Beam-management ▪ SL unlicensed for handset ▪ SL positioning for V2X/IIoT/handset ▪ V2X UE to UE Relay ▪ Multi-hop Relay	▪ SL TSC ▪ SL FR2 WI
• V2X • Public safety (PS) possible	• V2X,VRU • Power saving in VRU and handset	• Extend support to handset such as XR	

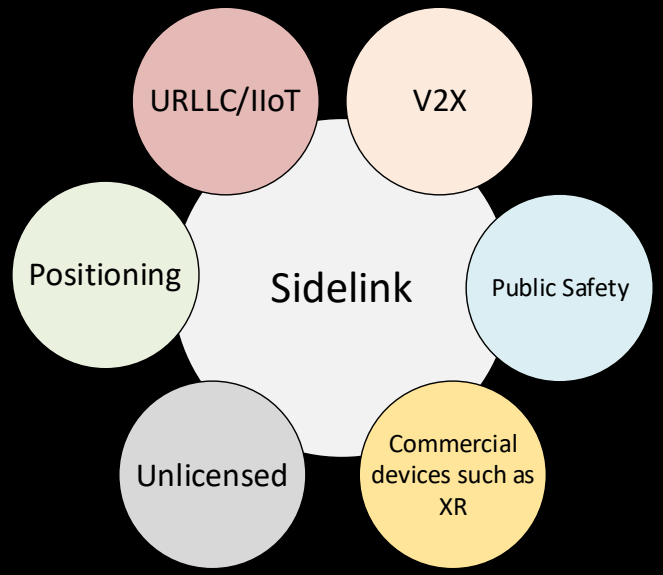

Lenovo 2023 Lenovo. All rights reserved.

Motivation for Sidelink to support Time Sensitive Communication

- To date – focus on study and definition of sidelink/D2D communication(QoS) for V2X (3ms latency and 99.99% Reliability)
- No work to date on use of sidelink to meet requirements from Time sensitive communication, needed for functional safety use case in V2X – Advanced driving, IIoT
- Time sensitive communication and precise clock synchronization needed for many of the factory applications
- 5G-ACIA investigating sidelink deployment for industrial factory and the white paper is expected H2-2023
- Utilizing gNB based communication implies potential extra hops in various scenarios and Sidelink is complementary to the gNB deployment in the factory
  - For example, PLC connected to UE controlling various Sensors/Actuators (S/As)
  - Data exchange between collaborating mobile robots
  - Using sidelink can eliminate this extra hop and resulting spectral inefficiency.

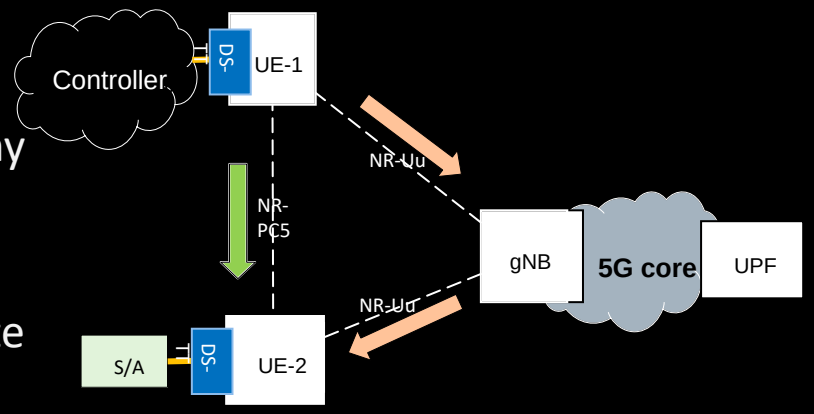

Figure: Showing the extra hop via gNB compared to Sidelink

Lenovo 2023 Lenovo. All rights reserved.

Time Sensitive Communication enhancement for Sidelink (1/2)

Use Case 1:

- Closed loop motion control
  - *High reliability low-latency communication: 1ms, 2ms@99.9999%*
  - *Time sensitive communication (TSN)*

- Motion controller in a production line
  - *Motion controller connected to gNB*
  - *Motion controller connected to a UE*

- Field device (sensor/actuator) connected to PLC (controller)
  - ***Deployment 1:*** *Each field device(S/A) in an industrial network may require wireless connectivity to a controller as illustrated in the right figure (e.g., UE-2)*
  - ***Deployment 2:*** *Field devices (S/A) connected to a wireless gateway using wired interface and gateway UE wirelessly connected to a controller as illustrated in the right figure (e.g., UE-1)*

Message size [byte]	Transfer interval [ms]	No. of UEs	Survival time [ms]
50	0.5	≤ 20	0.5
40	1	≤ 50	1
20	2	≤ 100	2

Table: Requirements of motion control use case requiring 99.999 to 99.999 99 for a service area of 50 m x 10 m x 10 m

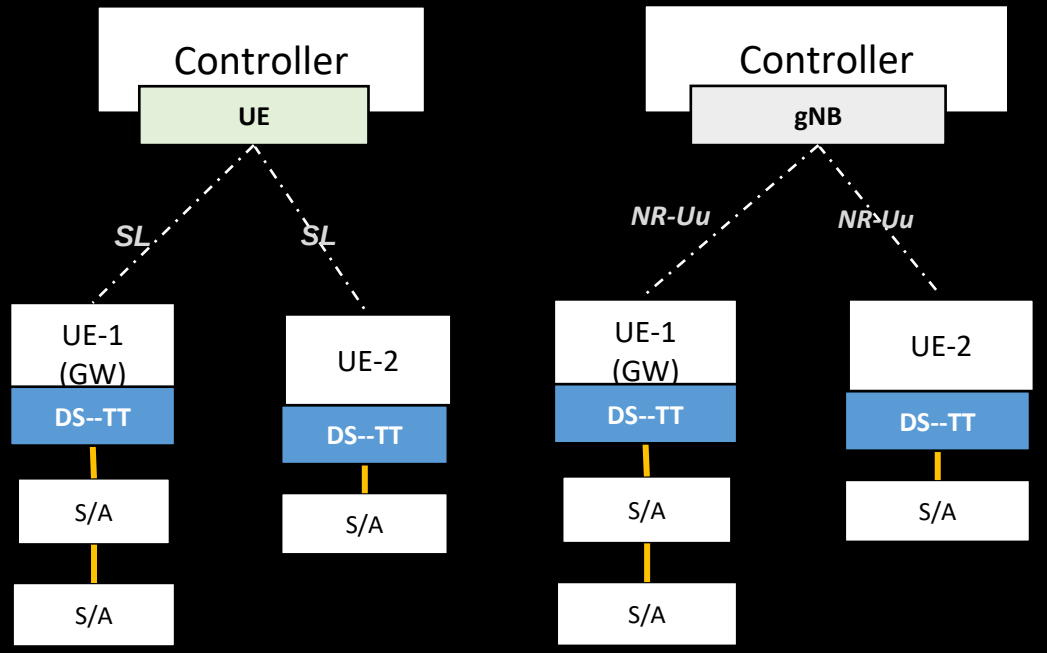

Figure: Controller connected to a UE and illustrating sidelink deployments

Figure: Showing field devices exchanging data directly without routing via controller

Lenovo 2023 Lenovo. All rights reserved.

Time Sensitive Communication enhancement for sidelink (2/2)

Use Case 2:

- Cooperative carrying robots/AGVs supporting Sidelink device-to-device communication requires
  - *Exchange of control commands and control feedback done using periodic deterministic communication and time-sensitive networking*
  - *High reliability low-latency communication:99.9999%@2.5ms*
  - *Time sensitive communication (TSN) @1µs clock synchronicity*

Message size [byte]	Transfer interval [ms]	Latency [ms]	No. of UEs	Survival time [ms]
250; 500 with localisation information	> 5 ms > 2.5 ms > 1.7 ms	< 0.5 x transfer interval	2 to 8	0 transfer interval 2 x transfer interval

Table: Requirements of cooperative carrying robot use case requiring 99.9999 to 99.999 999 availability for a service area of 10 m x 10 m x 5 m from 3GPP TS 22.104

Use Case 3:

- Controller to controller wireless communication;
  - Several controller communicate in large printing machine
  - Individual machine handling common task involves coordinated handover of work pieces

Sidelink device-to-device communication for C2C requires

- *High reliability low-latency: 1 k @99.9999% and 10ms & 50ms latency*
- *Time sensitive communication (TSN) @1µs clock synchronicity*
- *Stationary UEs*

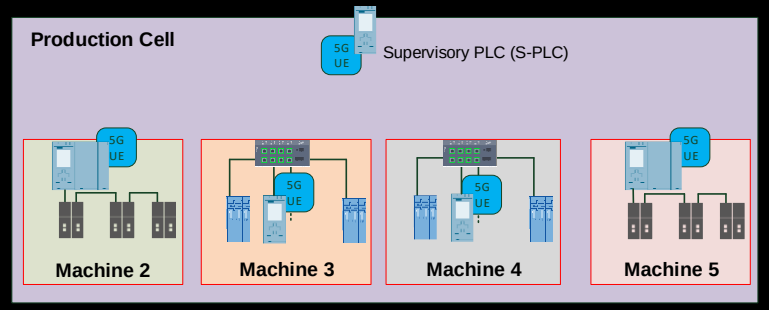

Figure: *controller to controller use case from 3GPP TS 22.104*

Message size [byte]	Transfer interval [ms]	Latency [ms]	No. of UEs	Survival time [ms]
1k	≤ 10 ms	< transfer interval	5 to 10	10ms
1k	≤ 50 ms	< transfer interval	5 to 10	50ms

Table: *Requirements from controller to controller use case from 3GPP TS 22.104*

Lenovo 2023 Lenovo. All rights reserved.

Proposed Areas of Study to support Time Sensitive Communication for Sidelink

- Feasibility study for supporting direct sidelink timing communication such as to support of Time Sensitive Communication Assistance Information (TSCAI) and survival time enhancements for functional safety

- Evaluate accurate time distribution over PC5 for working clock synchronization, including accurate reference timing delivery and time synchronization with propagation delay compensation

- Feasibility study on improvements to physical layer reliability and latency of Sidelink control/data channel communications for various IIoT use cases, taking into account R16/17 URLLC/IIoT as baseline targeting

Lenovo 2023 Lenovo. All rights reserved.

thanks.

Smarter technology for all

Lenovo