3GPP TSG RAN Rel-19 workshop
Taipei, June 15 - 16, 2023

RWS-230289

Source: ZTE, Sanechips

Agenda: 5

Views on Further UL Coverage Enhancements in Rel-19

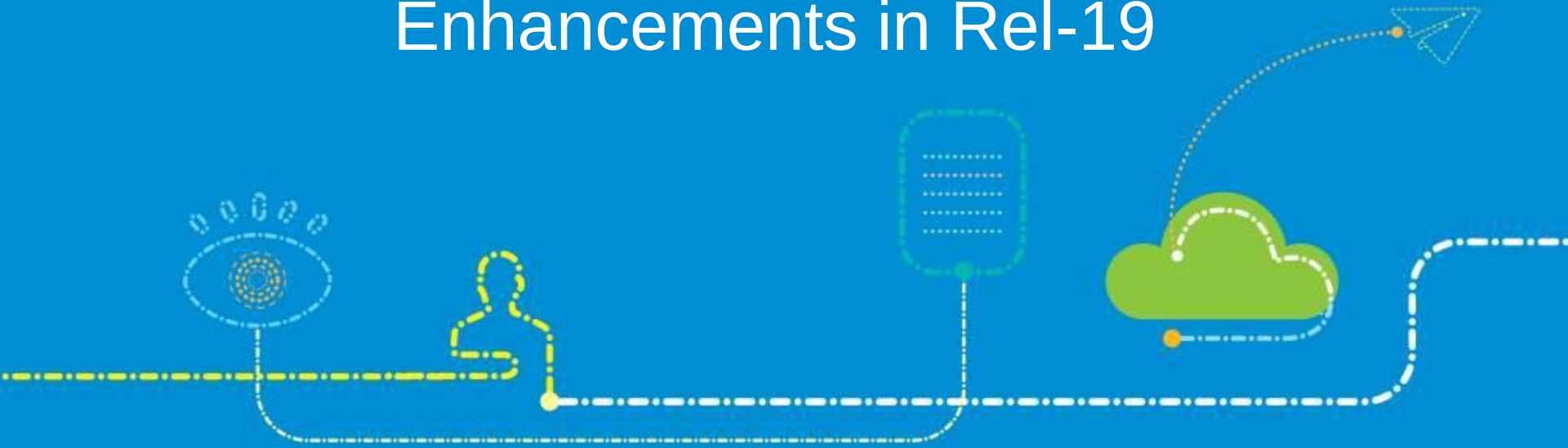

Background

- Coverage is one of the key factors that an operator considers when commercializing cellular networks due to its direct impact on service quality as well as CAPEX and OPEX.
- During previous releases, potential bottleneck channels have been identified through evaluation. Some enhancements have been done for some of the channels targeting both TN and NTN scenarios.

Bottleneck channels identified in Rel-17 CE SI:

- For FR1(Urban/Rural):
  - 1st priority
    - PUSCH for eMBB
    - PUSCH for VoIP
  - 2nd priority
    - PRACH format B4
    - PUSCH of Msg3
    - PUCCH format 1
    - PUCCH format 3 with 11bits and 22bits
    - Broadcast PDCCH
- For FR2(Urban):
  - PUSCH eMBB (DDDSU and DDSU)
  - PUSCH VoIP (DDDSU and DDSU)
  - PUCCH F3 11bits and 22bits
  - PRACH B4
  - PUSCH of Msg3

Enhancements during Rel-17 CE WI:

- PUSCH
  - Enhancement of PUSCH repetition type A
  - TBoMS
  - Joint channel estimation for PUSCH repetition/TBoMS
- PUCCH
  - Joint channel estimation for PUCCH repetition
  - Dynamic PUCCH repetition factor indication
- PUSCH repetition type A for Msg3 initial transmission and retx

Enhancements during Rel-18 WIs of FCE and NTN:

- PRACH
  - Multiple PRACH transmissions with same beam
- Dynamic waveform switching for PUSCH
- Power domain enhancements
- PUCCH repetition for Msg4 HARQ-ACK

- UL coverage enhancements on top of existing mechanisms can be further considered in Rel-19 to obtain reliable coverage during the whole signaling procedure.

© ZTE All rights reserved

Multiple PRACH transmissions with different beams

- The PRACH coverage can be enhanced due to the higher beamforming gain by finding the best Tx fine beam during PRACH transmissions.
  - It is observed about 1~3 dB gain from beam sweeping with different Tx fine beams compared with multiple PRACH transmissions with the same Tx wide beam according to the evaluation in Rel-18.
- It is also beneficial to subsequent uplink transmission, e.g., Msg3, for which the best Tx fine beam can also be used.
- Note: This enhancement was discussed in Rel-18 CE WI, but not supported in Rel-18 due to limited TUs.

Fig.1 Multiple PRACH with same wide beam

Fig.2 Multiple PRACH with different fine beams

- Potential enhancements in Rel-19.
  - E.g., PRACH resource partitioning among multiple PRACH transmissions with same beam and different beams, best Tx fine beam indication, etc.

© ZTE All rights reserved

Larger PRACH coverage for FWA in FR2

Motivation

- In the typical case of RACH SCS=60KHz, the cell radius is up to about 2.3km due to the limitation of the largest detection range, i.e., CP length, allowed by current PRACH format in FR2.

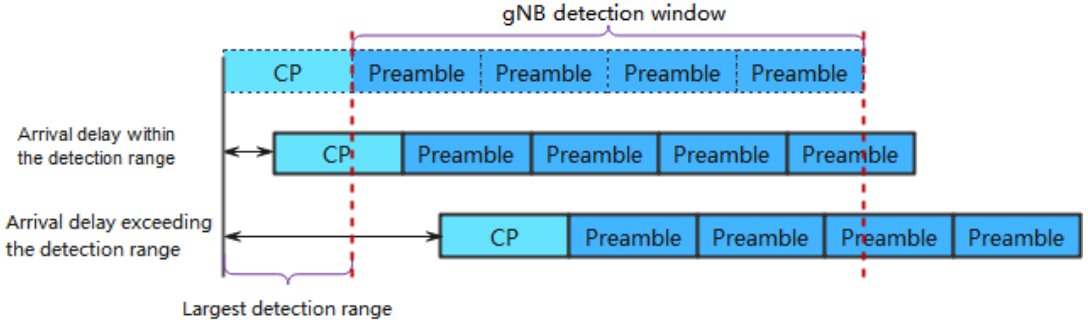

- However, in practical network deployment for FWA, much more than 2.3km cell radius is required, e.g., 5~10km.
- Taking the first several preamble repetitions as CP may expand the largest detection range to multiple-CP length. However, it requires gNB to blindly detect within multiple detection windows, and thus the detection performance is degraded significantly.

Potential enhancement in Rel-19

- Study the potential solutions to enhance the PRACH coverage of FWA scenario in FR2, e.g., support smaller SCS for short PRACH formats in FR2 or introduce long PRACH format of FR1 to FR2.

© ZTE All rights reserved

PUSCH repetition type A for a PUSCH scheduled by DCI format 0_0 with CRC scrambled by C-RNTI

Motivation:

- Msg5 PUSCH, which is scheduled by DCI format 0_0 with CRC scrambled by C-RNTI does NOT support repetition transmission yet.
- More UEs can access in the NW after implementing repetition of PRACH/Msg3/ Msg4 HARQ-ACK, but would be congested during Msg5 PUSCH transmission, which would jeopardize the commercialization of existing CE features in both TN and NTN scenarios.
- Re-transmission is not a typical way at least for NTN scenario due to larger delay and significant performance gap (at least 10 dB) comparing with Msg3 repetition.
- If segmentation is used for Msg5, about 32 segmentations are required to approach similar packet size as Msg3. The layer 2 header overhead increases significantly (e.g., 63.4% for 32 segmentations), making it an undesirable solution in reality.
- Except for Msg5, similar coverage issue could be observed for a PUSCH scheduled by DCI format 0_0 with CRC scrambled by C-RNTI even after UE capability reporting.

Potential enhancement in Rel-19:

- Request mechanism for repetition transmission of PUSCH scheduled by DCI format 0_0 with CRC scrambled by C-RNTI, e.g., via separate PRACH resources or a higher layer signaling in Msg3 PUSCH
- Repetition transmission mechanism (including, repetition indication, RV determination, available slot determination and frequency hopping, etc.),
    - E.g., the same approach as Msg3 re-transmission which is scheduled by DCI format 0_0 with CRC scrambled by TC-RNTI can be reused.

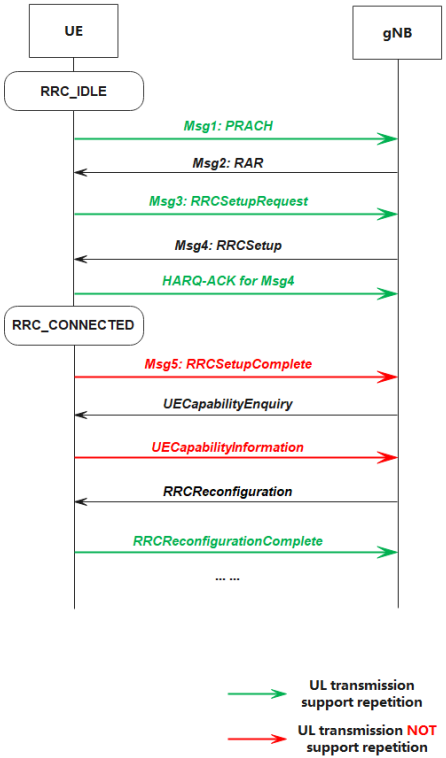

© ZTE All rights reserved

Power domain enhancement

- **Rel-18 leftover on enhancements for increasing UE power high limit for CA and DC**
  - Both reactive and proactive enhancements are proposed in Rel-18. Due to limited time, it is focusing on the reactive enhancements to the PHR report framework in Rel-18.
  - Proactive enhancements can be more helpful for gNB's future scheduling, as gNB is unable to know how long the UE transmission power is expected to be maintained based on instant reactive reporting.
  - Specify proactive enhancements in Rel-19. The proactive enhancements proposed in Rel-18 can be the start point.

Reactive	$\Delta P_{PowerClass}$
	Power class
	P-MPR
Proactive	Start and length of evaluation period for power class fallback
	Estimated duration of power class fallback
	Estimated duration over which UE can sustain Pcmax before additional P-MPR is required
	Sustainable duty cycle to prevent a fallback
	Energy/power availability

© ZTE All rights reserved

Objectives

- Specify multiple PRACH transmissions with different beams [RAN1, RAN2].
  - E.g., PRACH resource partitioning among multiple PRACH transmissions with same beam and different beams, best Tx fine beam indication, etc.
- Study and specify if needed the potential solutions to enhance the PRACH coverage of FWA scenario in FR2 [RAN1].
  - E.g., support smaller SCS for short PRACH formats in FR2 or introduce long PRACH format of FR1 to FR2.
- Support PUSCH repetition type A for a PUSCH scheduled by DCI format 0_0 with CRC scrambled by C-RNTI [RAN1, RAN2]
  - Request mechanism, e.g., via separate PRACH resources or a higher layer signaling in Msg3 PUSCH
  - Repetition transmission mechanism e.g., the same approach as Msg3 re-transmission which is scheduled by DCI format 0_0 with CRC scrambled by TC-RNTI can be reused.
- Specify proactive enhancements in Rel-19 [RAN1, RAN2, RAN4].
  - The proactive enhancements proposed in Rel-18 can be the start point.

© ZTE All rights reserved

Thanks

Tomorrow never waits