SKY Perfect JSAT Views on Release-19

Input for SA Release 19 SA workshop (June 2023)

Agenda Item: 3.3

Source: Muneaki Ogawa / SKY Perfect JSAT

JSAT general view on Rel-19

- General
  - In general, the advantages of the 3GPP ecosystem include the promotion of open innovation through global cooperation, the guarantee of interoperability for each device, and the reduction of procurement costs through mass production. We are very excited about the satellite access integration (or NTN (Non-Terrestrial Network)) being developed by 3GPP because of the benefits of the 3GPP ecosystem. As a satellite operator, we hope that future innovative NTN will be realized in 3GPP's open ecosystem and that sufficient resources for related research and work will be allocated beyond Release-19.
  - The number of satellite operators that can provide global coverage alone is limited, and many satellite operators need to complement each other's coverage, orbits and frequencies through interoperability and roaming. As a satellite operator, we hope that the 3GPP ecosystem will fully support the functionality required for such interoperability and roaming.
- Release-19 topics
  - We see priority given to the following studies, which will enable the provision of value-added services and coordination among multiple operators, and which will form the basis for technologies to be developed after Rel-19.
    - Architecture enhancement for Regenerative payloads
    - Dual access across different PLMNs (NTN/NTN or NTN/TN operators)
  - In addition, we hope to ensure that Store and Forward, UE-satellite-UE communication, Multicast and Broadcast Service via satellite and GNSS independent operation studies are carried out that will enable the provision of value-added services.

JSAT Rel-19 high interest satellite topics

- Architecture enhancement for Regenerative payloads
  - Regenerative payloads enables satellite operators to provide new services and use cases like loop back communication between UEs via satellite, edge computing on board. Furthermore, gNB + UPF onboard with ISL (Inter Satellite Link) architecture will be the essential for future 3D Mesh networks (satellites in different orbit are interconnected in space each other).
- Dual access across different PLMNs (NTN/NTN or NTN/TN operators)
  - The current 3GPP architecture does not allow simultaneous 3GPP access between different PLMNs. Dual access or roaming by multiple satellite operators, or between satellite and terrestrial operators, are important for satellite operators' businesses to extend each other's coverage and capabilities.

Architecture enhancement for Regenerative payloads

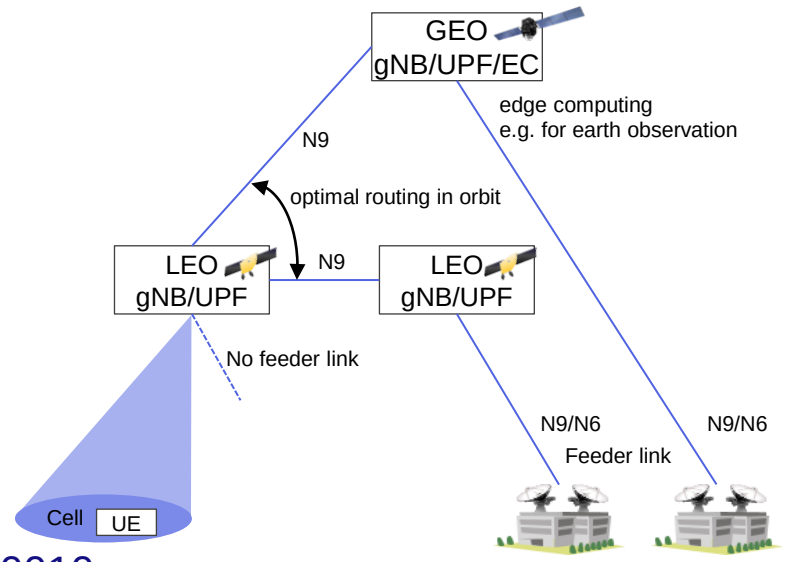

Dual access across different PLMNs (NTN/NTN or NTN/TN operators)

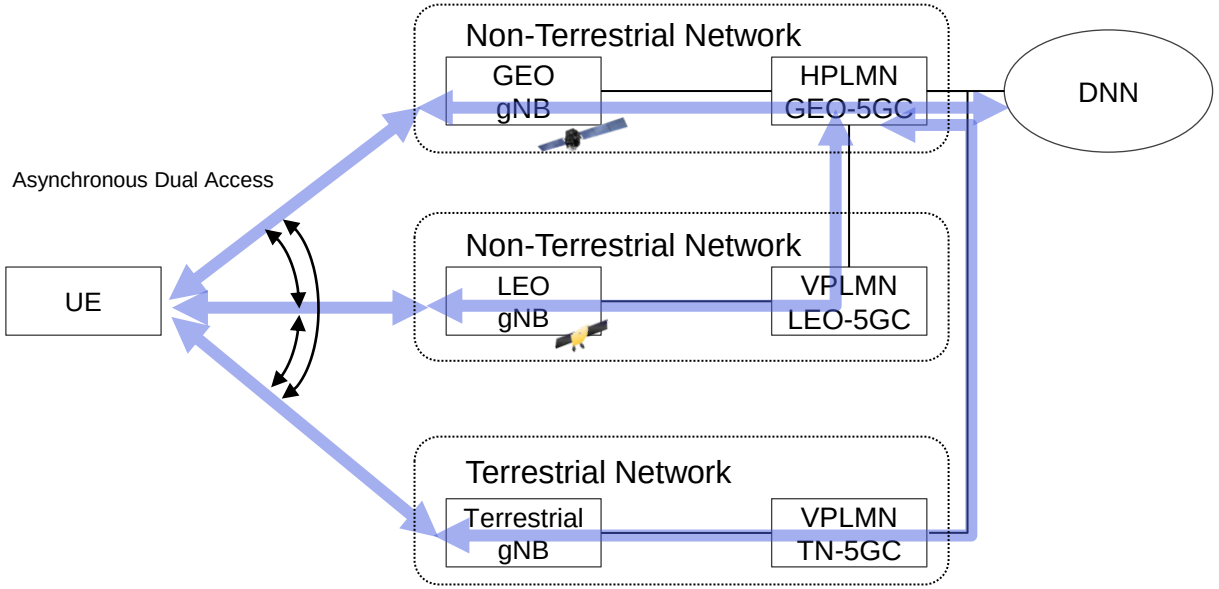

(Appendix) Satellite related study and work up to Rel-19

- Satellite access integration into 5G System has been studied from Rel-16. Phase 1 normative work was completed in Rel-17, and phase 2 work and backhaul enhancement are almost completed in Rel-18.
- In Rel-19, satellite access phase 3 and dual steering should be studied according to stage 1 requirements.

	Study Item	Work Item
Release 16	FS_5GSAT (TR22.822) Study on using Satellite Access in 5G,FS_5GSAT	
Release 17 （Phase 1）	FS_5GSAT_ARCH (TR23.737) Study on architecture aspects for using satellite access in 5G FS_5GSAT_MO (TR28.808) Study on management and orchestration aspects with integrated satellite components in a 5G network	5GSAT Stage 1 of 5GSAT 5GSAT_ARCH Integration of satellite components in the 5G architecture
Release 18 （Phase 2）	FS_5GSAT_Ph2 (TR23.700-28) Study on 5GC enhancement for satellite access Phase 2 FS_5GSATB (TR23.700-27) Study on Support of Satellite Backhauling in 5GS	5GSAT_Ph2 5GC/EPC enhancement for satellite access Phase 2 5GSATB 5G system with satellite backhaul
Release 19 （Phase 3）	FS_5GSAT_Ph3 (TR22.865) Study on satellite access - Phase 3,FS_5GSAT_Ph3 FS_DualSteer (TR22.841) Study on Upper layer traffic steering, switching and split over dual 3GPP access Rel-19 Stage 2 study will be required	Rel-19 Stage 1 work will be required Rel-19 Stage 2 work will be required

Stage1 Stage2