3GPP TSG-SA WG2 Meeting #129
Dongguan, China, 15 – 19 October, 2018

S2-1810280

Source: LG Electronics
Title: Discussion on QoS in MA-PDU
Document for: Discussion
Agenda Item: 6.8 FS_ATSSS
Work Item / Release: 5GS_Ph1 / Rel-15

Discussion on QoS in MA-PDU

LG Electronics

QoS of a PDU Session

❑ QoS Rule
- QoS rule identifier
- QFI
- Packet Filter Set (UL)
- Precedence value

❑ QoS Flow level QoS parameters
- 5QI
- GFBR / MFBR
- Averaging Window

❑ QoS Profile
- All QoS Flow (both GBR / Non-GBR)
  - 5GS QoS Identifier (5QI)
  - Allocation and Retention Priority (ARP)
- GBR QoS Flow
  - GFBR (Guaranteed Flow Bit Rate)
  - MFBR (Maximum Flow Bit Rate)

❑ Packet Detection Rule (PDR)
- Packet Filter Set
- QFI
- QoS Enforcement Rule (e.g. MFBR, GFBR, RQI)

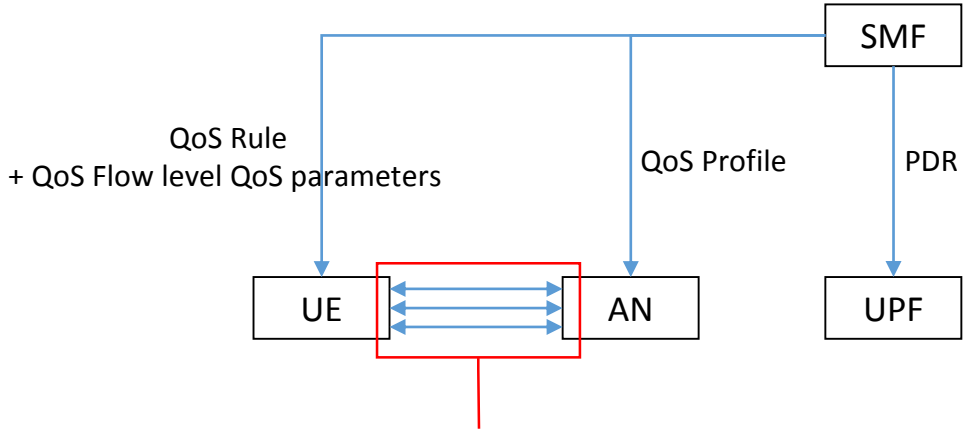

- Establishment of AN resources
  - Radio bearer
  - IPsec SA
- Update AN mapping information
  - Radio bearer – QoS Flow
  - IPsec – QoS Flow

QoS in MA-PDU Session

❑ The difference between MA-PDU and normal PDU

- MA-PDU has two accesses

❑ Considerations in MA-PDU

- Access dependency of QoS Rule (including Reflective QoS) and PDR
  - There is no “access information” in QoS Rule and PDR
    - ➢ Separate QoS Rule / PDR or Common QoS Rule / PDR?

- GFBR Enforcement
  - GFBR for UL/DL is enforced by the RAN and UPF
    - ➢ No issue?

- AMBR Enforcement
  - UE-AMBR is enforced by the AN
    - ➢ There are two accesses in MA-PDU, so the UE may use 2 x UE-AMBR
      - ✓ If the UE has both 3GPP and N3GPP PDU Sessions, there is same issue
      - ✓ No issue?
  - Session-ABMR is enforced by UPF for UL/DL
    - ➢ No issue

- Notification control
    - ➢ Notification control can be used for MA-PDU?

UL QoS - Common QoS Rule

❑ No need to change QoS Rule

❑ For data flows requires GBR

- If data flow is sent over one access (e.g. N3GPP), AN may release radio resources of unused access (e.g. 3GPP). There is no need to update QoS Rule of the UE.

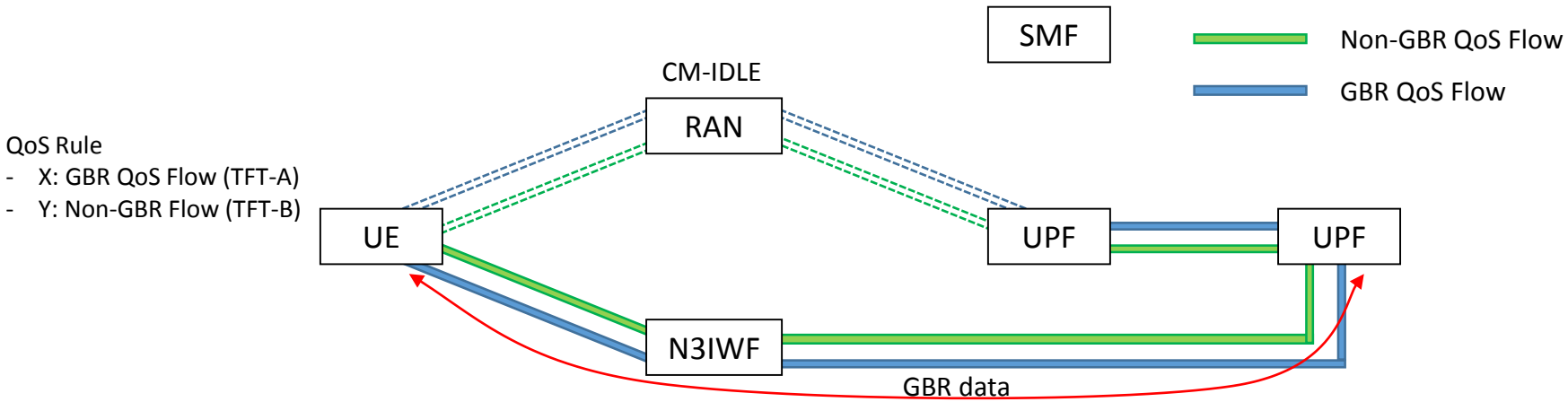

- Based on ATSSS rule, if the UE needs to send GBR data over 3GPP access, the UE performs Service Request
  - the SMF allocates GBR resources in the RAN.
  - The RAN need to keep radio resources even though the GBR QoS Flow is not used.
  - When the RAN releases radio resources due to congestion, the SMF shall not release GBR QoS Flow. In this case, there may exist a scenario that the UE has GBR QoS Rule but no corresponding resources in 3GPP access.
    - ➢ To solve this issue, the UE need to send signalling to the SMF before moving traffic

UL QoS - Access specific QoS Rule

❑ Need to change QoS Rule

- QoS Rule include access type information

❑ For data flows requires GBR

- If GBR QoS Flow is sent over one access (e.g. N3GPP) or if there is congestion in the AN, AN may release radio resources of unused access (e.g. 3GPP). Then SMF updates QoS Rule of the UE.

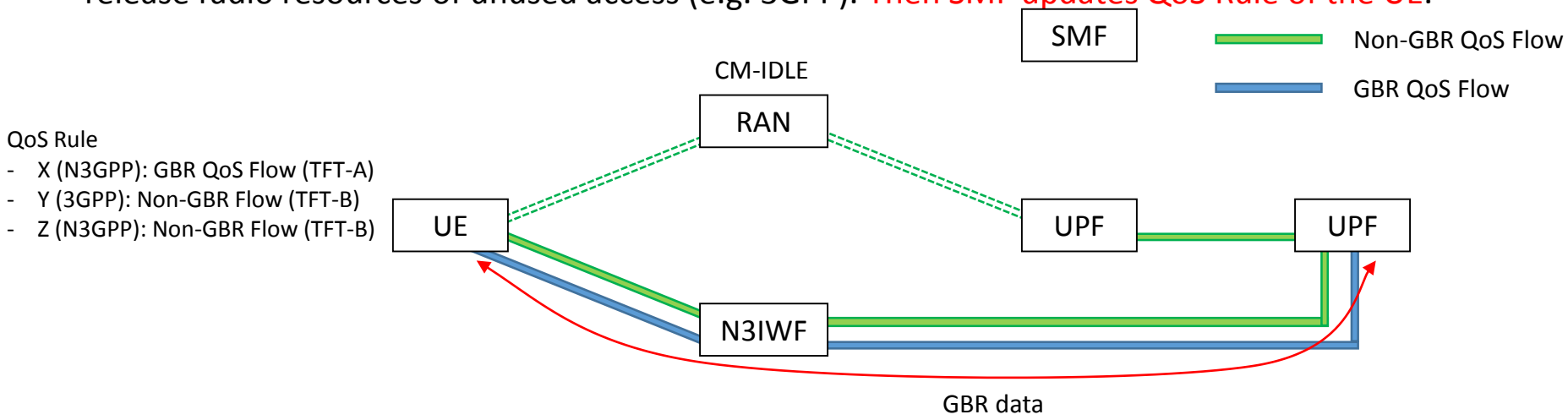

- Based on ATSSS rule, if the UE needs to send GBR data over 3GPP access, the UE does not have any QoS Rules for TFT-A in 3GPP, the UE sends it using default QoS rule.
  - To solve this issue, the UE shall send indication to the SMF before moving data flows.
  - If steering is changed frequently (e.g. data flow is moved before RAN triggers release of radio resources), there is no need to update QoS Rule.

DL QoS - Common PDR

- **No need to change QoS Rule**

- **For GBR QoS Flows**
  - The UPF can enforce GFBR regardless of access (because GFBR is provided by PDR)
  - Similar to UL QoS, UPF doesn't know whether radio resource for the GBR QoS Flow is reserved or not
    - The UPF shall send signalling to validate whether radio resource is reserved for the QoS Flow

DL QoS - Access specific PDR

❑ Need to change QoS Rule

- QoS Rule include access type information

❑ For GBR QoS Flows

- The UPF enforces GBR QoS Flow per each access
  - A GBR QoS Flow may use 2 times value of GFBR
- The SMF shall update PDR of GBR QoS Flow when the GBR QoS Flow is released, e.g. becomes CM-IDLE or due to congestion.
- Based on ATSSS rule, when the UPF needs to send GBR data over 3GPP access, the UPF does not have GBR QoS Flow over 3GPP access. Then the UPF shall send signalling to request GBR QoS Flow establishment

Notification control

❑ Notification control is only used in 3GPP access

- If data flow uses both 3GPP and N3GPP access.
- In this case, due to congestion in 3GPP, the RAN may report Notification to the SMF even though end-to-end GFBR is satisfied.

- Does UPF need to support Notification control based on measurement report?
  - RAN sends Notification to SMF when GFBR cannot be guaranteed based on, e.g. measurements like queueing delay or system load
  - Currently, we only agreed RTT measurement

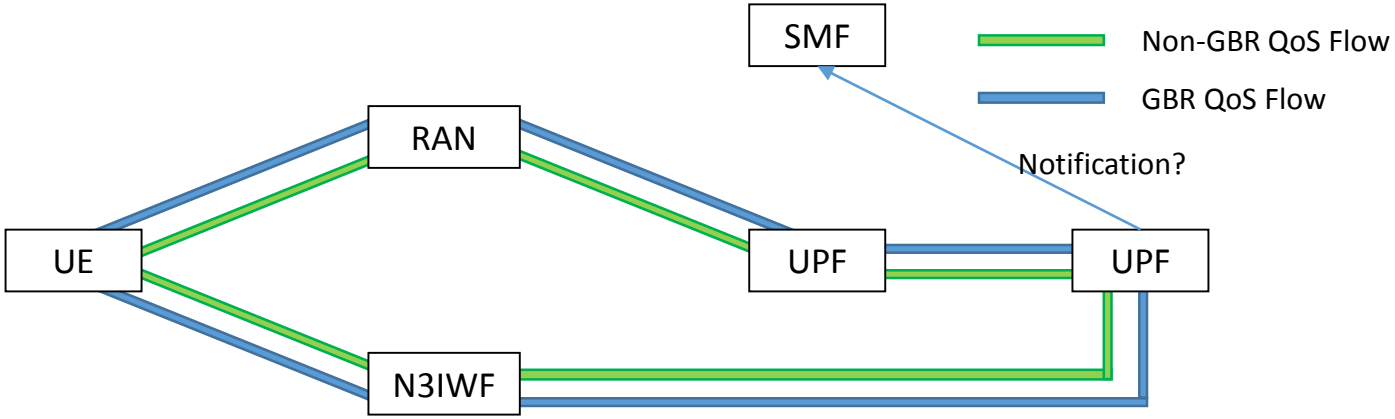

Proposals

❑ Proposes to minimize overall system impact

- Use common QoS rule and common PDR
  - Reduces # of packet filters in the UE and UPF
    - ➢ The ATSSS capable UE does not need to support more # of packet filters
  - Access independent GFBR enforcement
  - Less signalling then access specific QoS Rule

- In order to verify radio resource for GBR QoS Flow is allocated
  - In UL, the UE shall send signaling to the SMF before moving data flows
  - In DL, the UPF shall send signaling to the SMF before moving data flows

- Notification control
  - In Rel-16, Notification control is not supported for MA-PDU