Views on LAA for Unlicensed Spectrum – Scenarios and Initial Evaluation Results –

NTT DOCOMO, INC.

NTT DOCOMO, INC., Copyright 2014, All rights reserved.

Background

- More spectrum is needed for cellular operators to meet the increasing traffic demand.
- Although licensed spectrum is always preferable for providing better user experience, unlicensed spectrum can be considered as an effective complement.
- Operators should endeavor for higher spectral efficiency and better user experience. If LTE unlicensed has such potentials, this should be studied.
  - The first step is to clarify the overall system performance and user experience with LTE unlicensed.
  - Since unlicensed spectrum has been widely used by Wi-Fi and some operators have deployed operator managed Wi-Fi systems, coexistence with Wi-Fi needs to be carefully considered.

NTT DOCOMO, INC., Copyright 2014, All rights reserved.

Motivation

Our motivations for licensed-assisted access (LAA) using LTE are to

- Use the most efficient wireless access technique, i.e., LAA using LTE, in unlicensed spectrum such as 5GHz.
  - LAA is expected to provide higher link/system-level performance than Wi-Fi , e.g., IEEE802.11ac, by use of advanced technologies of LTE such as robust FEC, hybrid ARQ, and interference coordination/ avoidance.
- Achieve better traffic offloading and higher user experience through LAA using LTE than those for Wi-Fi due to tighter interworking between licensed and unlicensed bands.
  - To do this in a cost-effective way, traffic offloading from CN/RAN is worth to study as well as the air IF.

NTT DOCOMO, INC., Copyright 2014, All rights reserved.

Potential deployment scenarios

- Various deployment scenarios for LAA Using LTE can be considered.
  - Co-located/Non-co-located
  - Outdoor/Indoor
  - Charging policy

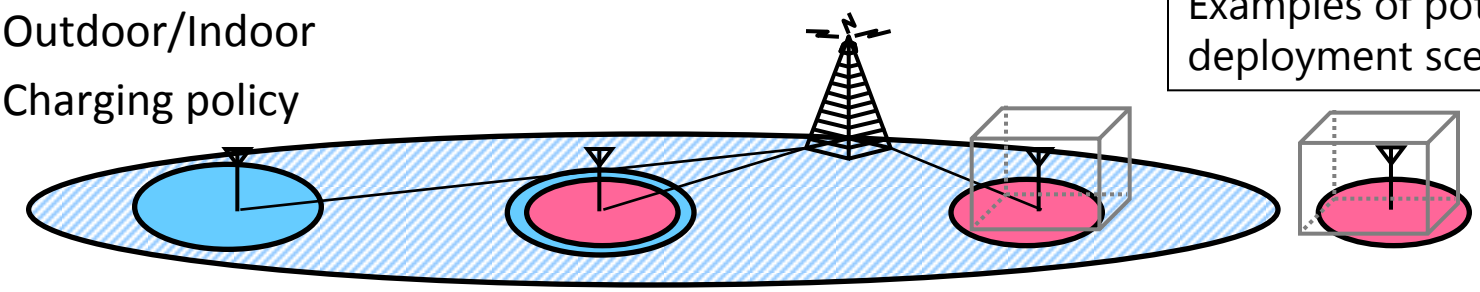

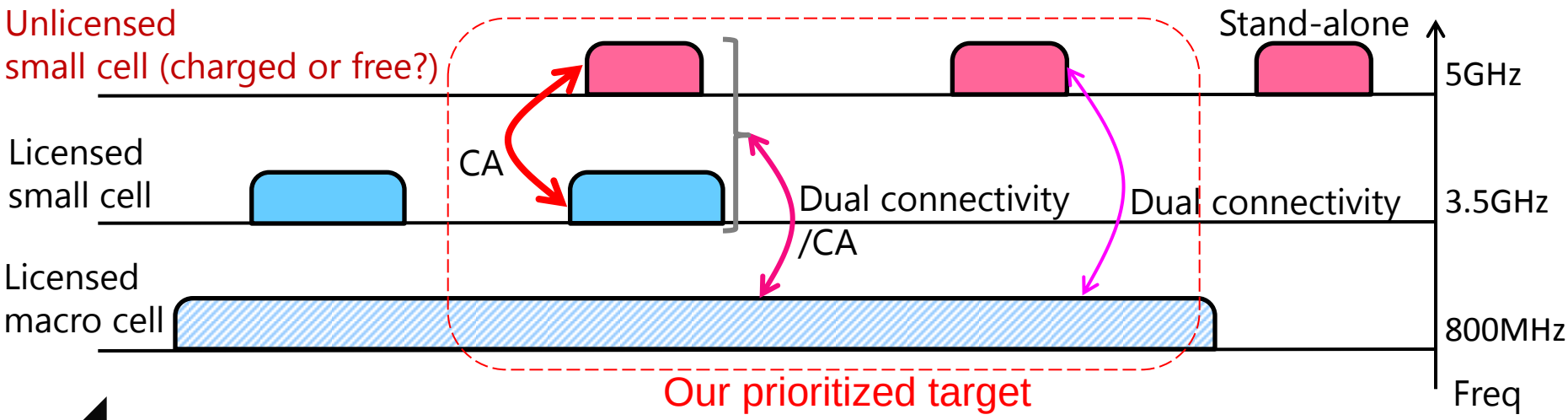

Tighter interworking w/ LTE licensed

- CA scenario offers the tightest interworking with LTE licensed
- However, other scenarios may be beneficial in terms of offloading effect

NTT DOCOMO, INC., Copyright 2014, All rights reserved.

Deployment scenario for study

- For the following reasons, CA would be a good starting point for study.
  - CA actualizes the tightest interworking between licensed and unlicensed bands, e.g., unified node to control wireless resource, improving system-level performance
  - Specification impact will be minimized focusing on CA scenarios since specification for CA has been well established since Rel-10.

- In addition, dual-connectivity (DC) for LAA is worth consideration as a tool to offer further core-level offloading.
  - E.g., traffic over unlicensed spectrum is offloaded to the internet from the eNB together with the local breakout technology (SIPTO).
  - In SI phase, feasibility study of LAA for DC should be done to identify potential specification impact in addition to Rel-12 DC.

- To support the possible charging policy, packet counting mechanism should also be studied for all the potential scenarios.

NTT DOCOMO, INC., Copyright 2014, All rights reserved.

Synchronization for LAA

- Performance of LAA would be highly affected by level of synchronization among LAA TPs. In the context of CA, following level of sync. can be considered.
  - Intra-operator synchronization
  - Inter-operator synchronization, particularly when TDD is operated in licensed band
- From sync. perspective, following scenarios are considered.
  - **Scenario #1:** Unsynchronized within a operator and among operators
  - **Scenario #2:** Synchronized within a operator but unsynchronized among operators
  - **Scenario #3:** Synchronized within a operator and among operators
    - In any cases, un-synchronization with other RATs are assumed.

➔ **Identify scenario that maximizes LAA link/system-level performance**

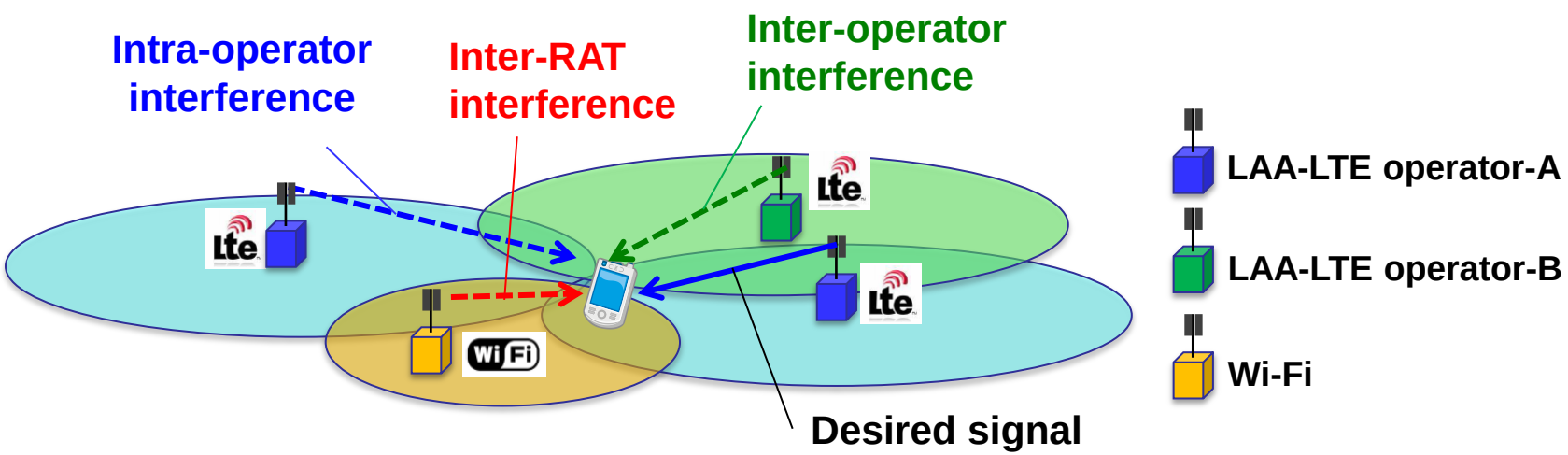

NTT DOCOMO, INC., Copyright 2014, All rights reserved.

Potential technologies for scenarios

- **Inter-RAT interference (WiFi, etc.)**
  - Mechanism to realize co-existence for fairness with other RAT, e.g., listen-before-talk (LBT) based on energy detection, should be studied
    - Maybe possible to separate spectrum usage between LAA and Wi-Fi via DFS
- **Intra-RAT interference (Inter- and intra-operator interferences)**
  - If tight synchronization can be assumed, i.e., Scenarios #2 and #3, intra-RAT interference can be better handled
    - Possible to suppress intra-RAT interference by NW coordination among LAA TPs such as ICIC and CoMP
    - Also possible to cancel dominant interference by advanced receiver assuming sync. LAA TPs even among operators

    *NW assistance information would be provided through LTE in licensed band
  - Otherwise (Scenario #1), intra-RAT interference would be handled by LBT based on cross-correlation detection
    - LBT threshold can be relaxed due to better link performance

NTT DOCOMO, INC., Copyright 2014, All rights reserved.

Potential benefits

- Higher link/system-level performance is achieved by LTE.
  - ➔ Initial evaluation results are shown in subsequent slides

- Better traffic offloading and higher user experience through LAA is provided due to tighter interworking between licensed and unlicensed bands.

- More advanced technologies, e.g., interference coordination/suppression, can be applied to LAA due to NW assistance of LTE in licensed band, depending on scenarios.

NTT DOCOMO, INC., Copyright 2014, All rights reserved.

Initial evaluation

- Scenarios for evaluation
  - Scenario-A: Single operator

A1: two Wi-Fi APs per cluster

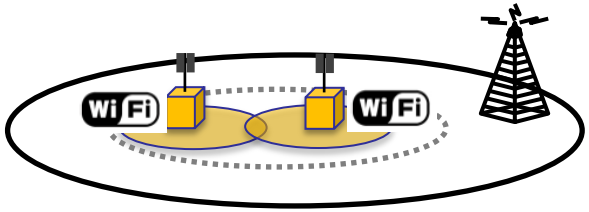

A2: two LTE small cells per cluster

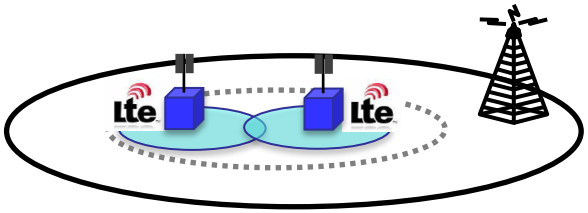

  - Scenario-B: Multiple operators

B1: two Wi-Fi APs per cluster per operator (total four APs)

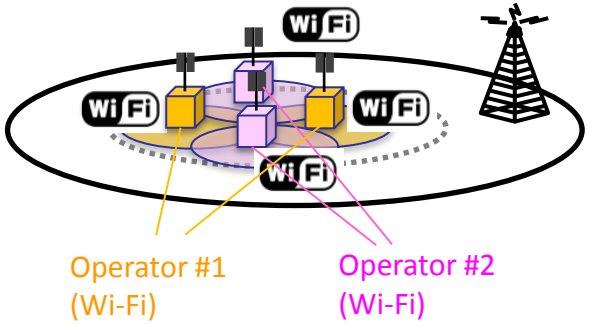

B2: two LTE small cells per cluster per operator (total four small cells)

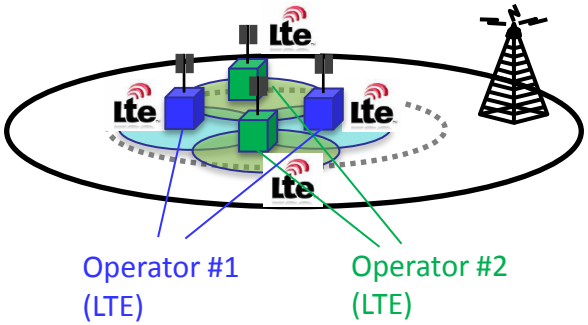

B3: two LTE small cells and two Wi-Fi APs per cluster

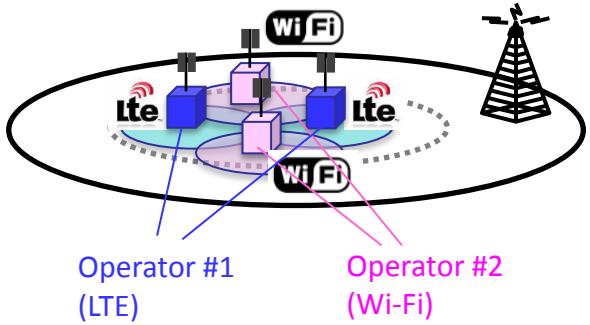

- Detailed evaluation assumptions are described in Appendix

NTT DOCOMO, INC., Copyright 2014, All rights reserved.

Initial evaluation results

- Single operator scenario

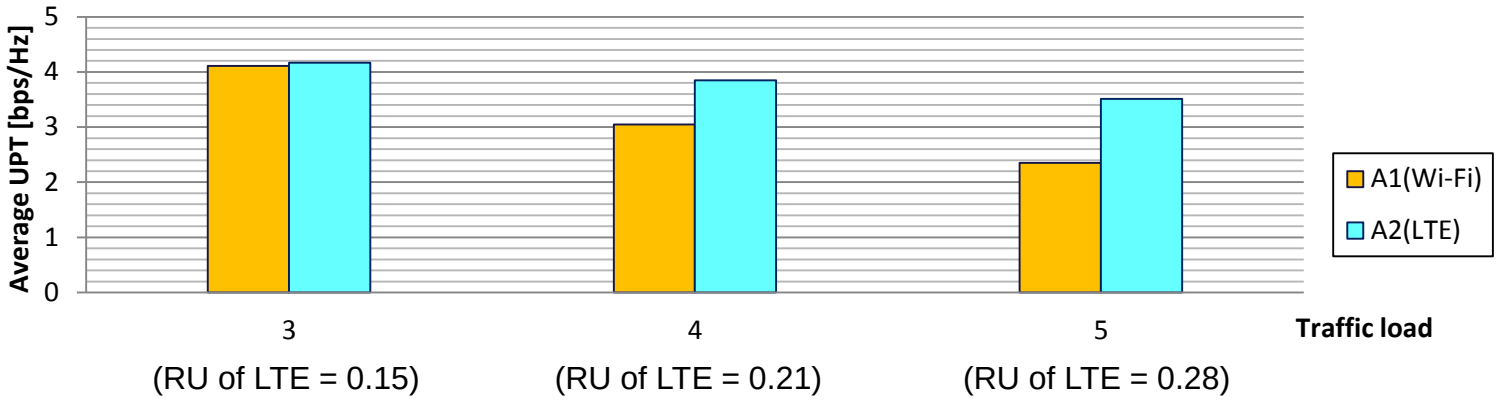

- Multiple operators scenario

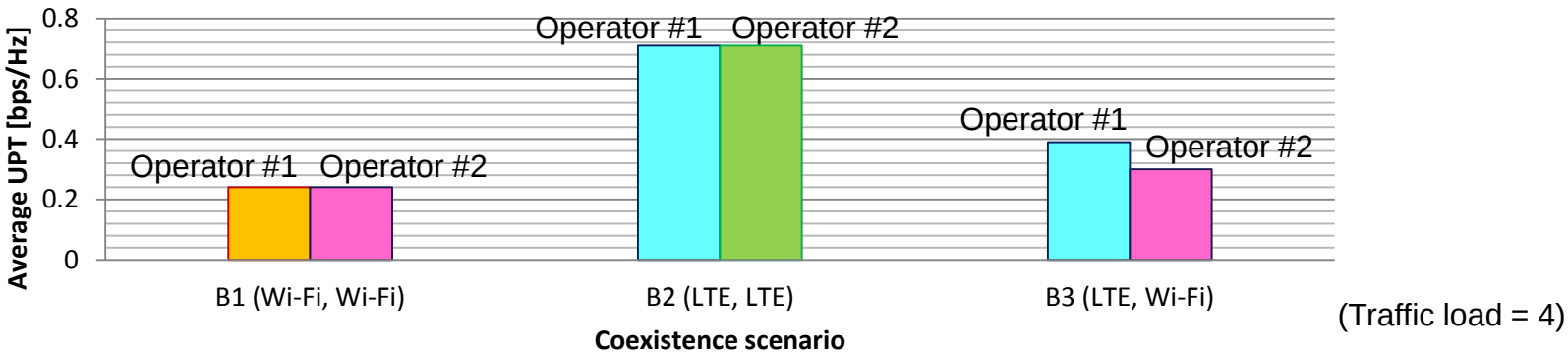

Observations

- LTE is more robust over traffic load increase than Wi-Fi
- LTE is a better neighbor to Wi-Fi, and LTE-LTE coexistence exhibits the best performance

→ Potentially LAA-LTE achieves more efficient wireless access than Wi-Fi

NTT DOCOMO, INC., Copyright 2014, All rights reserved.

Summary

- Investigation and evaluation are necessary to clarify whether LTE unlicensed can bring benefits over the existing Wi-Fi (802.11ac)
- Coexistence with existing technologies, e.g., IEEE 802.11ac, should be investigated from performance perspective
- Usage scenarios that can maximize LAA performance, e.g., intra-operator and/or inter-operator synchronized scenario, should be considered.
- Technologies to achieve tight interworking and traffic offloading from CN/RAN as well as the air IF should be investigated.
- Possible charging policies for LAA should also be taken into account.

NTT DOCOMO, INC., Copyright 2014, All rights reserved.

[Appendix] Evaluation assumptions

Parameters	LTE assumption	WiFi assumption
Bandwidth	20 MHz	
Frequency	5.0 GHz	
AP/small cell Tx power	23 dBm	
UE receiver type	MMSE	
Traffic model	36.814 FTP model 1 Packet size: 0.5Mbytes	
Channel model	AP/small cell to UE: ITU UMi (TR 36.872)	
AP/small cell dropping	Random and uniform within 50 m radius from cluster center Minimum distance between APs/small cells of the same operator: 20 m Minimum distance between APs/small cells of different operators: 0 m	
UE dropping	Random and uniform within 20 m radius from each AP/small cell Minimum distance between UE and AP/small cell: 5 m Indoor UE ratio: 0.8	
Cell selection	RSRP-based, Handover margin: 0 dB	Same as LTE
Antenna configuration and MIMO.	2D, Omni-directional, with 5dBi antenna gain for AP/small cell and 0 dBi for UE . 2x2 CPA, MIMO with up to 2 streams.	
Feedback	Short term SB CQI and WB PMI with feedback period of 10ms	Long term WB PMI and CQI
Link adaptation	QPSK1/8- 64QAM4/5, w/ OLLA	QPSK1/8- 64QAM4/5, w/ OLLA
Scheduler algorithm	PF scheduler w/ scheduling restriction (UE with SINR less than a threshold will not be scheduled)	RR scheduler at each AP CSMA/CA-based: - CCA Busy Threshold: -82dBm for WiFi and -62dBm for all power (WiFi and LTE) - Backoff window length: 4~10. - 8 us granularity of backoff procedure.
Transmission and Re-transmission	HARQ with max 3 times of re-transmission	Maximum 4ms for one transmission. ACK for each 1.5kbytes packet