LTE operation in unlicensed spectrum

3GPP Workshop on LTE in Unlicensed Spectrum

Sophia Antipolis, France, June 13, 2014

RWS-140012

Outline

- Motivation
- Benefits vs. concerns
- Requirements, deployment scenarios
- Case study: DFS in LTE
- Next steps
- Conclusion

Motivation

- More spectrum required to meet demand for wireless broadband capacity
- Current two-pronged cellular strategy

Regulatory: more licensed spectrum for e.g. carrier aggregation

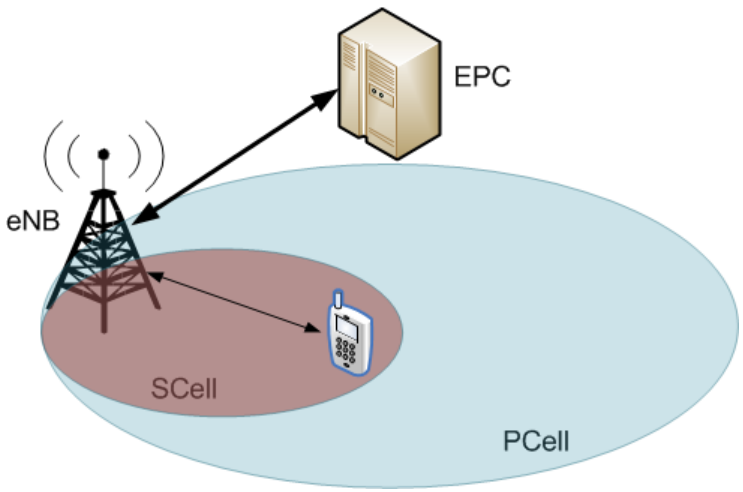

Traffic offloading to operator-deployed WiFi on unlicensed (shared) spectrum

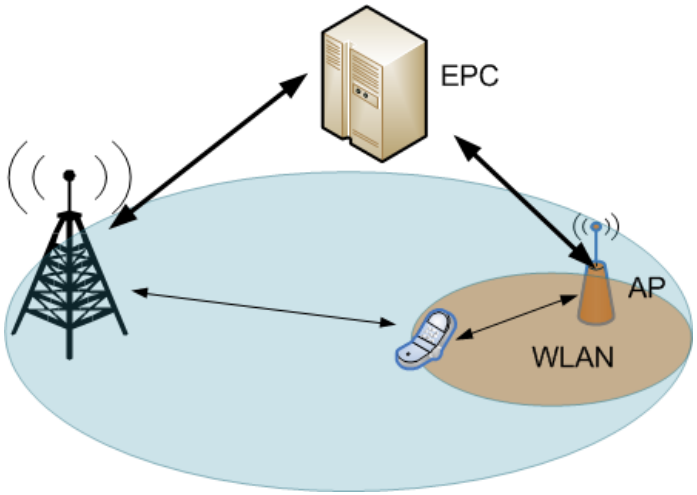

- Single RAT operation facilitates network integration/management, QoS, mobility

LTE-U solution → deploy LTE on unlicensed spectrum as complementary scheme to WiFi offloading

Deployment scenario examples

- License-assisted operation
  - Supplemental DL (S-DL) or TDD for SCell

- Co-located and non-co-located

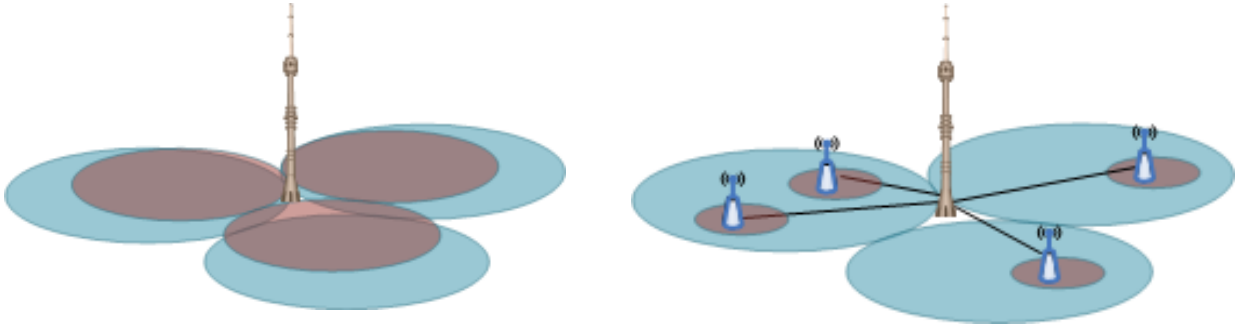

- Ideal backhaul is target scenario
- Non-ideal backhaul may be considered (if justified)

- 5GHz is a candidate band
  - But technology should be band-agnostic
  - Consider other spectrum sharing proposals (e.g. ASA in 3.5GHz band)

Benefits vs. concerns

Benefits

- Reliability, mobility, QoS as in licensed spectrum[1]
- Same RAT
- Improved spectral efficiency over WiFi with LTE-specific features
  - Hybrid-ARQ
  - Interference management/cancellation/suppression as opposed to interference avoidance in WiFi

Concerns

- Regulatory requirements governing operation of RLAN in unlicensed spectrum
- Feasibility of a unified solution that satisfies all geographic regions
  - Avoid market fragmentation
- Coexistence with WiFi and between LTE operators
- Unintended consequences on the quest for new licensed spectrum

Note 1: subject to interference from incumbent users e.g. radar, WiFi

Regulatory survey of 5GHz for Wireless Access Systems

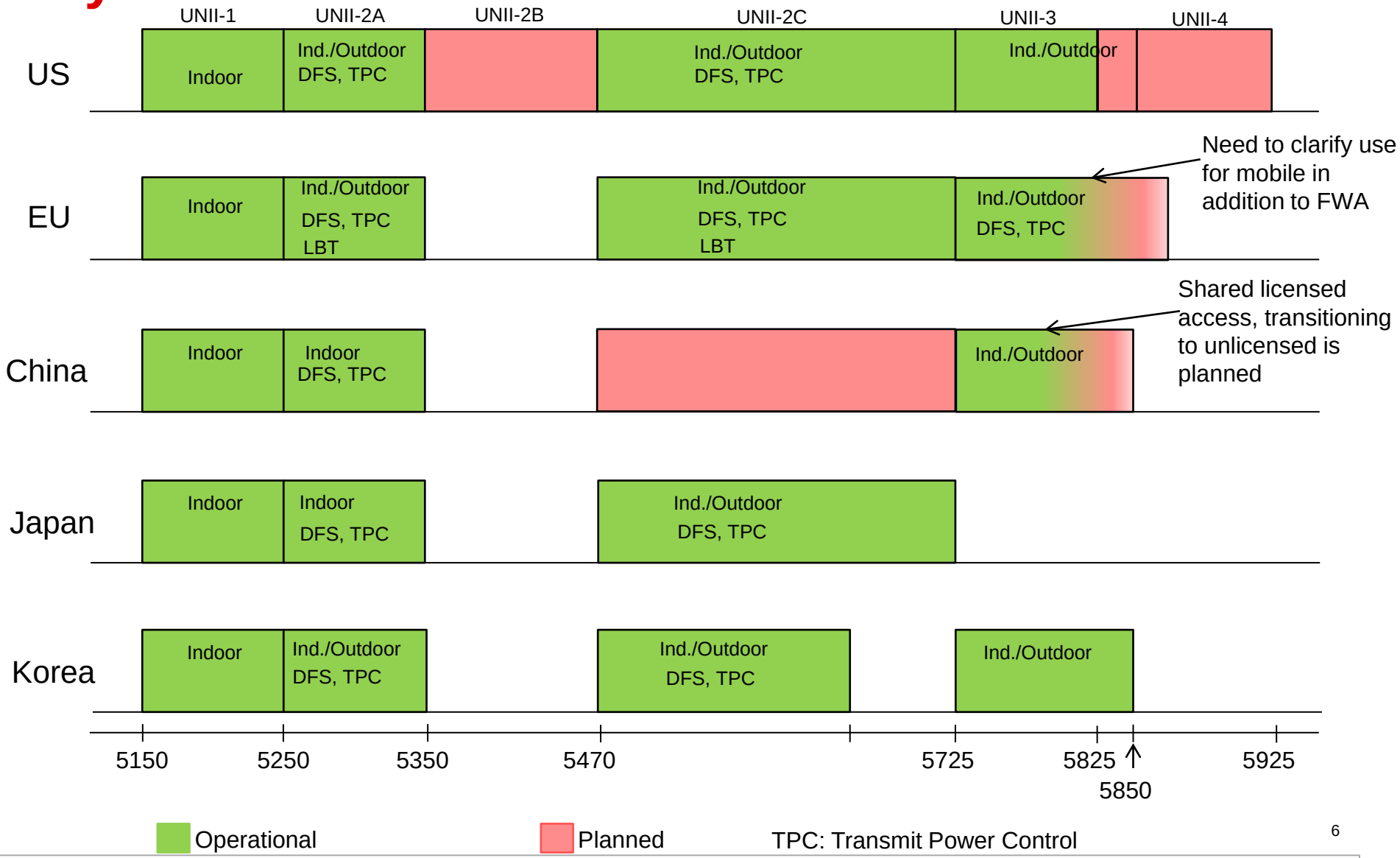

Regulatory survey (cont.)

- 5724-5825 is attractive for LTE operation → highest allowed transmit power/EIRP
- New or revised regulations in some bands (e.g. 5350-5470, 5850-5925) may also favor LTE operation

Enabling features

Reuse existing LTE features

- Small cell on/off discovery
- Cross-carrier scheduling
- TDD-FDD CA
- Dynamic TDD (EIMTA)

Possible enhanced features

- Small cell on/off enhancements
- CA enhancements
- Inter-operator coexistence/cooperation

Enhancements to satisfy regulatory requirements

- Dynamic Frequency Selection (DFS)
- Listen-before-talk (coexistence with WiFi)

Case Study: Feasibility of DFS in LTE

DFS Overview

- Purpose: Radar avoidance
  - Applicable frequency range: 5150 – 5350 MHz and 5470 – 5725 MHz

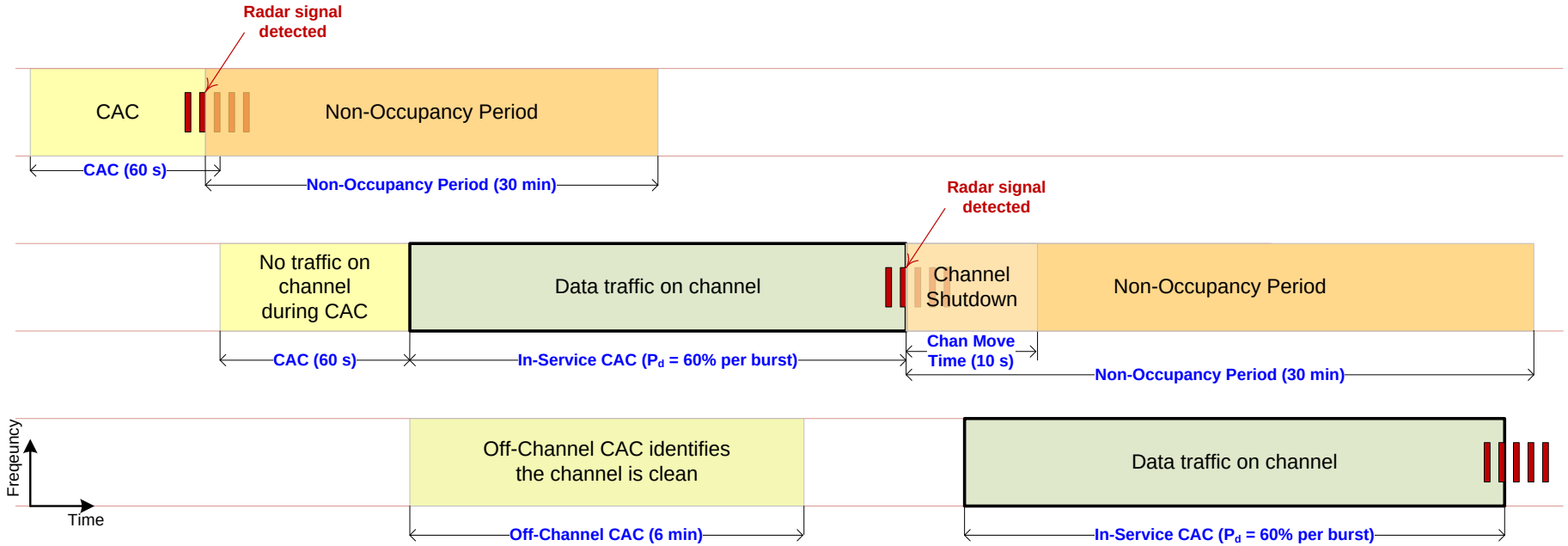

- DFS Requirements
  - ***CAC (Channel Availability Check) time*** = 60 sec
  - ***Off-channel CAC time*** = 6 min to 4 hours
  - ***Channel move time*** = 10 sec
  - ***Channel closing transmission Time*** = 1 sec
  - ***Non-occupancy period*** = 30 min
  - ***Probability of detection (per radar burst)*** = 60%, for both CAC and off-channel CAC

Relaxed requirements w.r.t. LTE TTI granularity

DFS detection threshold

- Per ETSI EN 302 502 / 301 893, DFS detection threshold is specified to detect signals from radars that can be interfered by max EIRP of UE or eNB transmitter
- If DL-only secondary CC, then only eNB needs to implement DFS

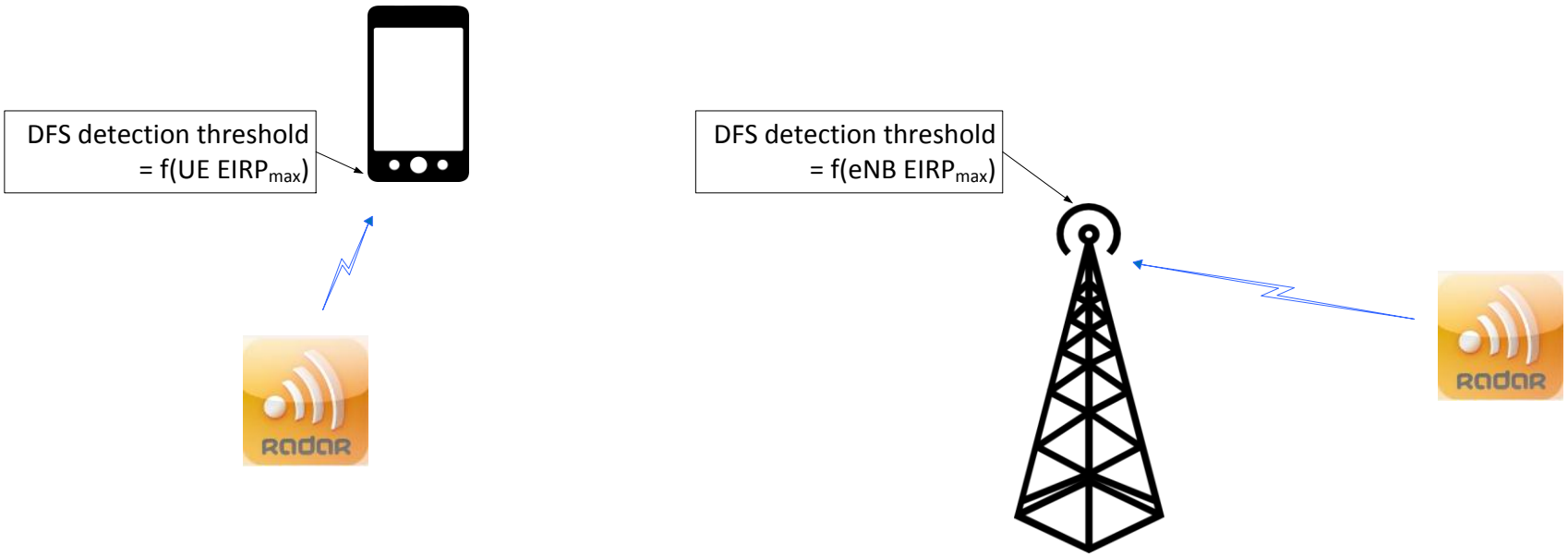

DFS: In-Channel CAC Approaches

- **Approach 1 - Silence period**
  - Silence period is configured for sensing
  - Window width and period should be carefully selected to meet the requirements for different radar test cases

- **Approach 2 - Continuously monitor FFT output with no silence period**
  - If interference level is strong enough interference detection may be feasible in frequency domain without configuring silence periods

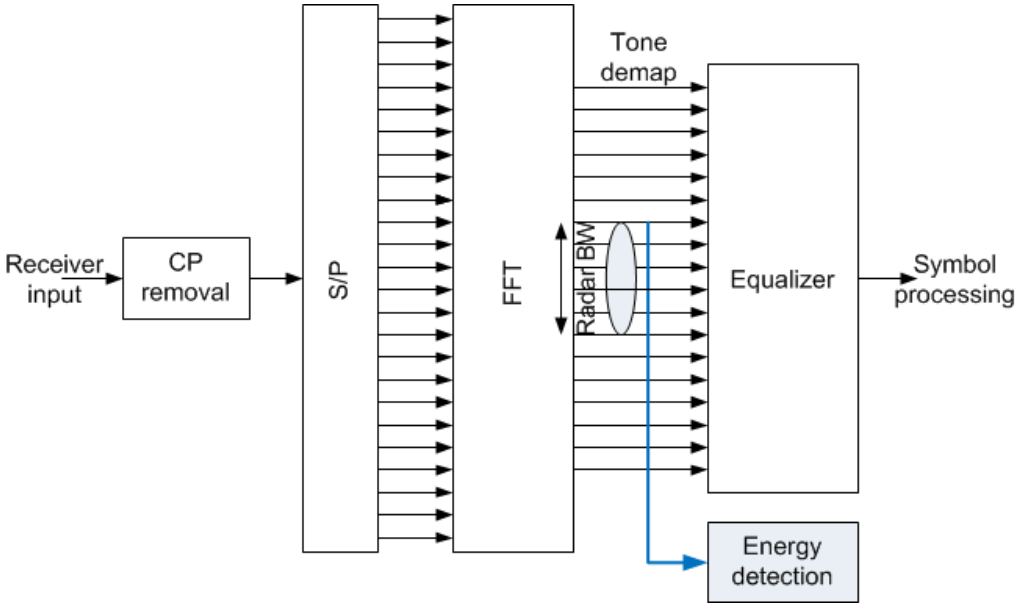

Link budget analysis at UE Rx

Parameter	Unit	Value					
System bandwidth	MHz	20					
Noise Power Density	dBm/Hz	-173.71					
UE transmitter e.i.r.p	dBm	23.0					
UE transmitter e.i.r.p density	dBm/MHz	10.0					
eNB transmitter e.i.r.p	dBm	30.0					
eNB transmitter e.i.r.p density	dBm/MHz	17.0					
Log-Normal Fade Margin	dB	0					
UE Rx Antenna Gain	dBi	0					
Penetration loss	dB	0					
Receiver noise figure	dB	9					
UE-eNB distance	km	0.01	0.05	0.1	0.2	0.5	1
Distance-dependent path loss	dB	58.18	86.03	98.02	110.02	125.87	137.86
Signal power density at baseband input	dBm/MHz	-41.19	-69.04	-81.03	-93.03	-108.88	-120.87
Radar signal bandwidth	MHz	1					
Monitored signal power at baseband input	dBm	-41.19	-69.04	-81.03	-93.03	-108.88	-120.87
Noise Power	dBm	-104.71					
Total monitored power at baseband input	**dBm**	**-41.19**	**-69.04**	**-81.01**	**-92.74**	**-103.30**	**-104.61**
C/N (=Es/No)	dB	63.52	35.67	23.68	11.69	-4.17	-16.16
DFS detection threshold (per ETSI EN 302 502 / 301 893)	**dBm**	**-55.99**					
Detection margin:	dB	**-14.80**	**13.05**	**25.02**	**36.75**	**47.32**	**48.62**

DFS detection is feasible for moderate UE-eNB distances
When UE is very close to the eNB, DFS detection can be left to eNB

Next steps

RAN Plenary

- Use cases and deployment scenarios
- Develop unified and global set of requirements

RAN WGs study item

- Investigate coexistence between LTE operators and between LTE and radar/WiFi
- Determine valid band and band combinations
- Investigate technology potential over LTE/WiFi interworking

RAN WGs work item

- If significant gains are shown in prior SI determine features to be specified

Conclusion

- LTE operation in unlicensed spectrum is feasible and beneficial
  - complementary to WiFi traffic offload
- Careful study is required to formulate a single set of requirements applicable to all geographic regions
- Coexistence between LTE and WiFi and between LTE operators must be addressed
- 3GPP work plan should be discussed addressing
  - Target use cases and deployment scenarios
  - Relevant regulations (current and planned)
  - RF band and band combinations
  - Enabling features/enhancements
  - Metrics: system and user throughput, cost/complexity tradeoffs etc.