**3GPP TSG SA WG2 Meeting #63** **TD S2-081158**
**Athens, Greece**
**18 - 22 February 2008**

---

| | |
|---|---|
| **Source:** | **Ericsson** |
| **Title:** | **GGSN in Rel8** |
| **Document for:** | **Discussion** |
| **Agenda Item:** | **8.3.3** |
| **Work Item / Release:** | **SAES** |

*Abstract of the contribution:*

At the SA2 #62 meeting the placement of the GGSN functionality for Release 8 were discussed. This contribution elaborates this subject and proposes that GGSN Rel8 is seen as a subset of PDN GW/Serving GW.

# Drivers for 3GPP Rel8

- One common packet core for 2G/3G and LTE in Rel8, not two parallel tracks, gives:
  - Simpler network and less complex products
  - Interworking between 2G/3G and LTE
  - All-IP
  - Less specification work in 3GPP, keeping timeplan
  - Reduce Capex/Opex long term
  - New functionality added to one track, not to two tracks

# GTP aspects

- Preferred target architecture:
  - One GTP track in Rel8
  - GTPv2 used for Rel8, GTPv1 not further developed in Rel8
  - Full interworking with pre-Rel8 frozen GTPv1
- GTPv2 expected to be closely aligned to GTPv1 to enable simple interworking between GTP versions
- Disadvantages with two GTP tracks
  - More specification work
  - The dual GTP specification and implementation in itself is not the major problem, it is the resulting increase of options in the network architecture
  - If GTPv1 would be further evolved in Rel8, it would also mean interworking between a ”moving” GTPv1 and a ”moving” GTPv2 in Rel8, which increases complexity
- GTPv2 advantages for 2G/3G (CT work in progress):
  - More efficient payload handling with less options, also to better support hardware implementations
  - Path management to be made mandatory for both control and user plane, to enhance the surveillance of failing/restarting nodes
  - Efficient recovery and restoration mechanisms to be defined in GTPv2, which has proven impossible in GTPv1
  - GTPv1 have some known deficiencies: it is not possible to remove or add parameters as needed, for example to remove parameters that are obsolete
- GTPv2 provides in addition support for handover to LTE, and for ISR

# Node aspects for 2G/3G operators

- 2G/3G operators may use only a subset of a complete Serving GW/PDN GW to get the functions of a Pre-Rel8/Rel8 GGSN
  - This do not preclude using separate nodes for PDN GW and Serving GW

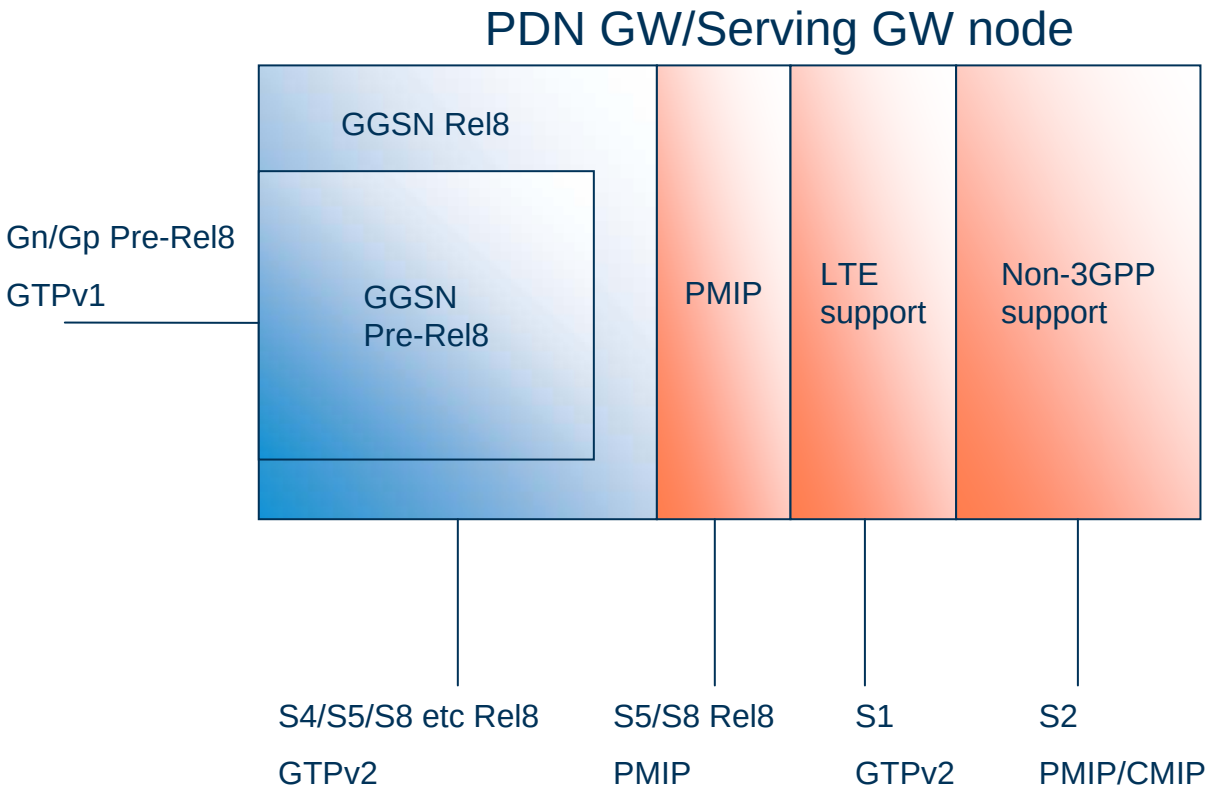

# Target Architecture

# Common EPC for 2G/3G and LTE

# Target architecture: Common EPC for 2G/3G and LTE

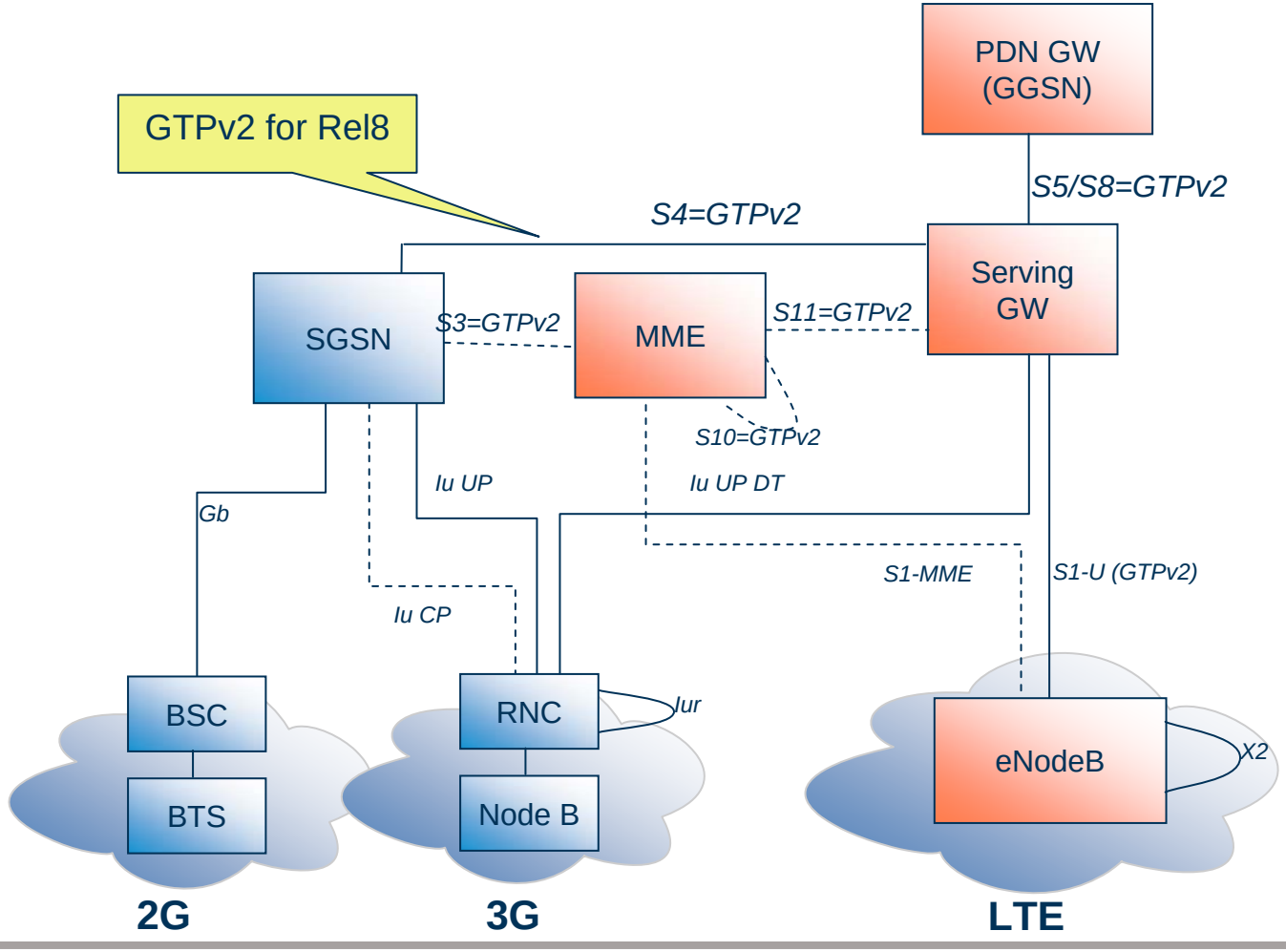

# Conclusions Target architecture

- One common packet core
  - One evolution path for the packet core supporting 2G/3G and LTE access.
  - GGSN functionality resides in S-GW/P-GW
- Only one GTP version to develop in R8, one GTP-spec (GTPv2)
- ISR supported
- One spec for 2G/3G (23.060 updated with SGW/PGW and EPS bearer procedures)

# Migration Path Option to Target Architecture

# Migration path option: 2G/3G access kept on GTPv1

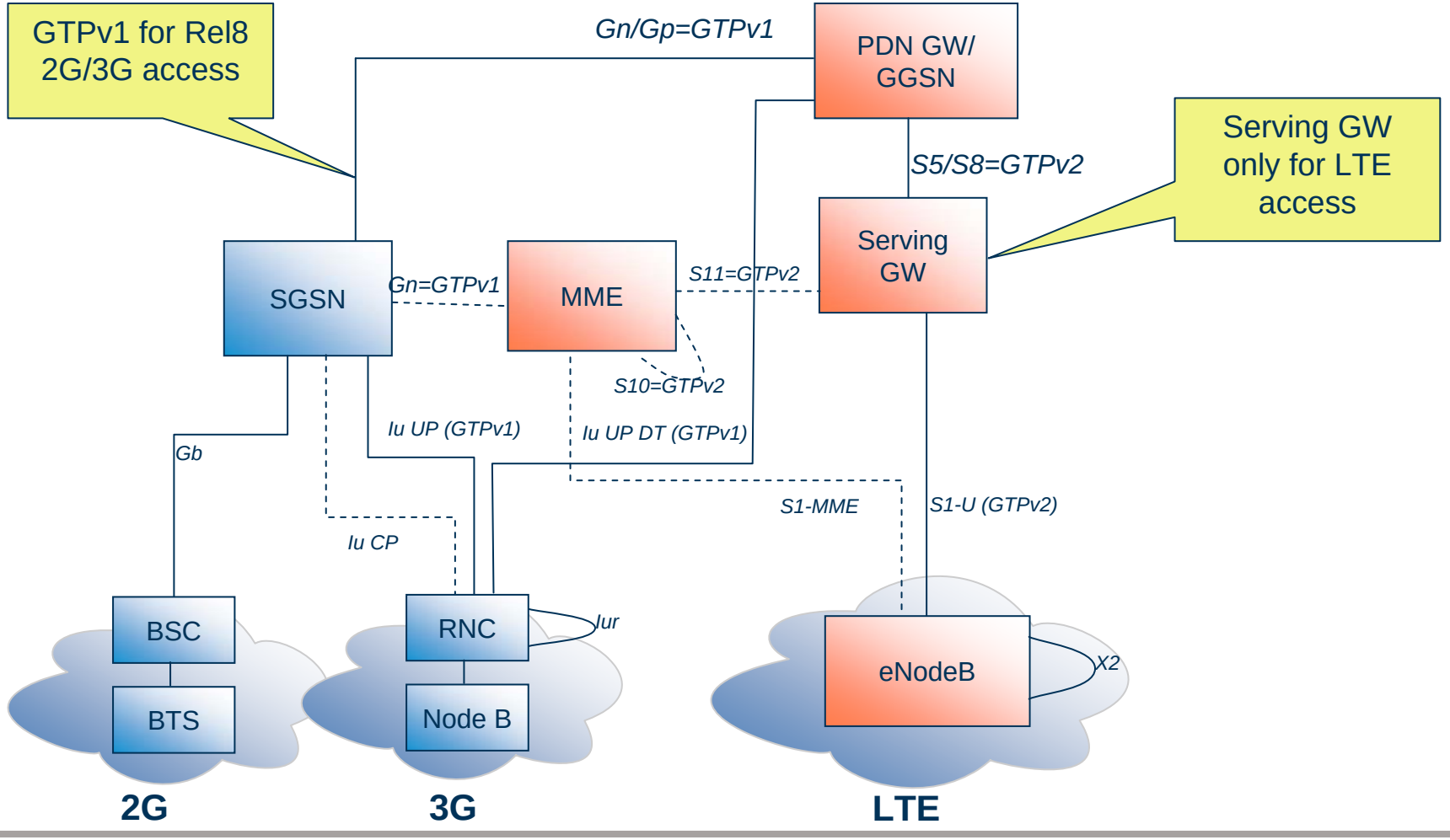

# Conclusions Migration path

- One common packet core
  - One evolution path for the packet core supporting 2G/3G and LTE access.
  - GGSN functionality resides in P-GW
- Functional additions to GTPv2 for LTE access, and to GTPv1 for 2G/3G access
- Differences from Target architecture:
  - Minimize impact on 2G/3G by keeping GTPv1 and not supporting Serving GW
  - 2 GTP versions in R8, two specifications to develop and maintain
  - Different roaming architecture for 2G/3G and LTE.
  - ISR not supported
  - EPS architecture impact (S3, S4 and S12)
- Migration to target EPC architecture possible at a later stage

# Summary

- Ericsson proposes a common EPC architecture for 2G/3G/LTE access as the target architecture for Rel-8
- Preferred option – as described in 23.401 today
  - GGSN resides in S-GW/P-GW
  - EPC architecture is based on GTPv2
  - 2G/3G access described in one spec, 23.060
  - GTPv1 is not further developed

- Migration option
  - 2G/3G access connected to P-GW using GTPv1 from SGSN
  - GGSN resides in P-GW, to enable handover between 2G/3G and LTE
  - Minimizing impact on 2G/3G by mimicking Rel7
  - Common EPC architecture is based on a mix of GTPv1 and v2
  - Decision to discontinue GTPv1 and evolved to target architecture can be taken later

ERICSSON

TAKING YOU FORWARD