SA WG2 Meeting #126
February 26 – March 2 2018, Montreal, Canada

S2-182052

Common API Framework (CAPIF) integration with SCEF and NEF

Intel

CAPIF Functional Model (TS 23.222)

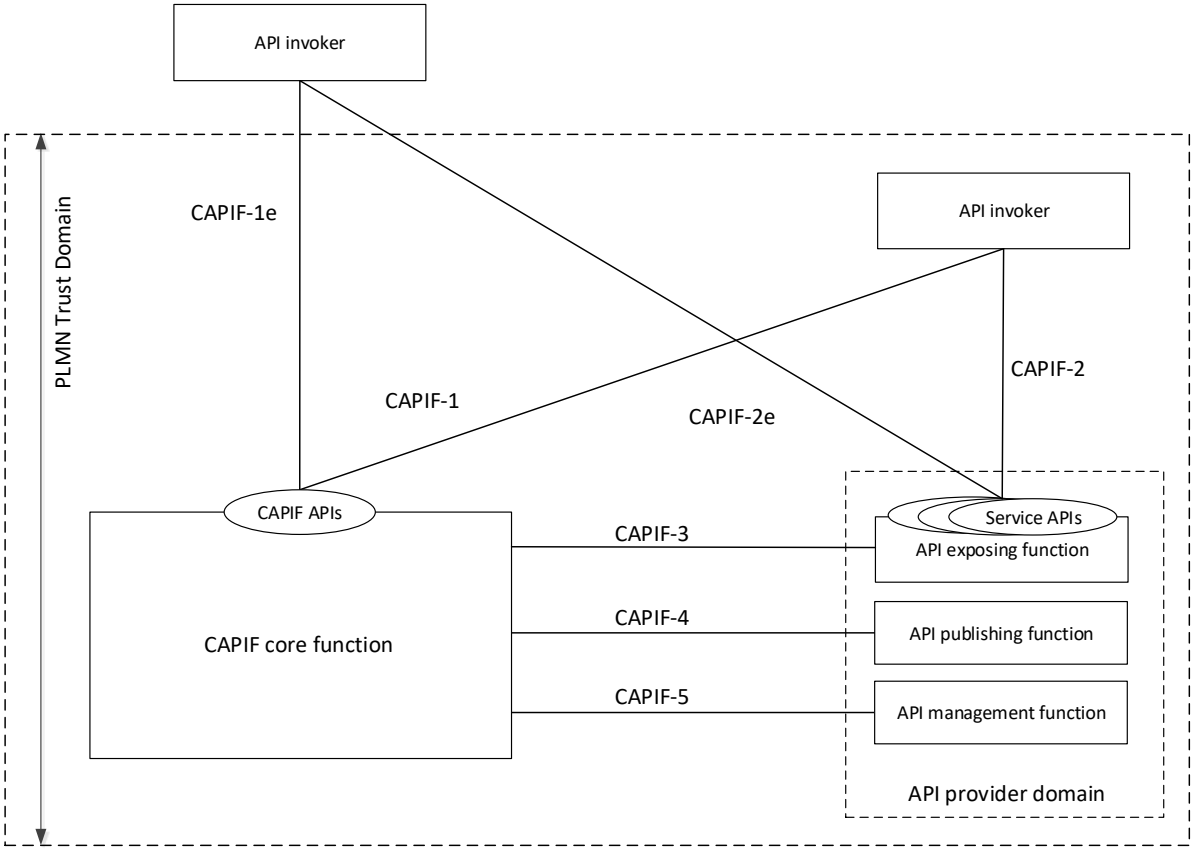

Architecture for Service Capability Exposure Function (TS 23.682)

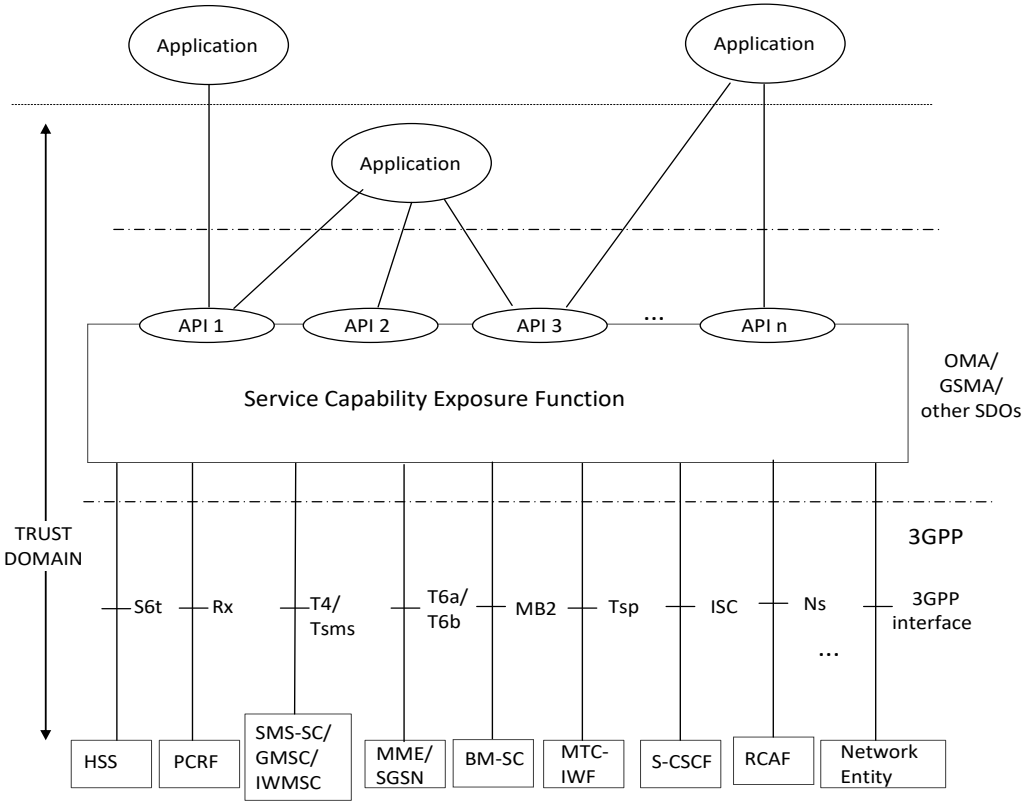

Architecture for 5G Network Exposure Function (TS 23.501)

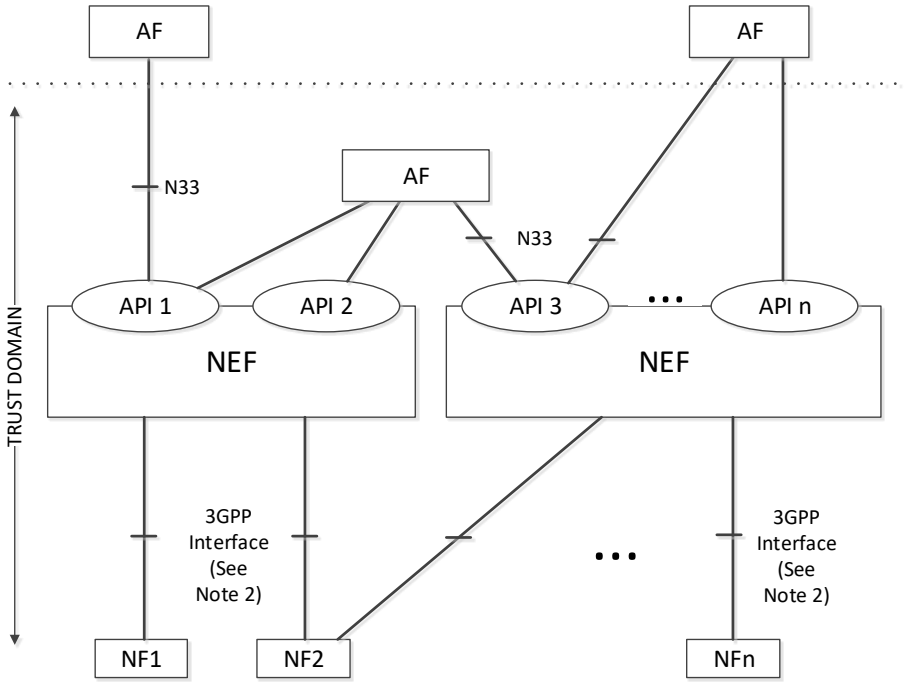

NOTE 1: Trust domain for NEF is same as Trust domain for SCEF as defined in TS 23.682.

NOTE 2: 3GPP Interface represents southbound interfaces between NEF and 5GC Network Functions e.g. N29 interface between NEF and SMF, N30 interface between NEF and PCF, etc. All southbound interfaces from NEF are not shown for the sake of simplicity.

Architectural Principles for CAPIF integration with SCEF and NEF

- CAPIF is common API framework for "northbound" interfaces to support external exposure of services APIs towards AF/AS (AF/AS may be part of trust domain).
  - CAPIF framework doesn't apply to internal 3GPP NFs and NFs discovery.

- In EPS, SCEF provides external network capability exposure. To support CAPIF framework in EPS, SCEF is assumed to be co-located with API Provider Domain functions (APDF) .
  - SCEF/APDF can be co-located (for e.g. in an API Gateway) with other CAPIF functions such as CCF. In such case CAPIF-3, CAPIF4, CAPIF-5 are not open interface.

- In 5GC, NEF provides external network capability exposure. To support CAPIF framework in 5GC, NEF is assumed to be co-located with API Provider Domain functions (APDF) .
  - NEF/APDF can be co-located (for e.g. in an API Gateway) with other CAPIF functions such as CCF. In such case CAPIF-3, CAPIF4, CAPIF-5 are not open interface.

- **Proposal#1**: Endorse above architectural principles and document them in TS 23.682 (for EPC) and TS 23.501 (for 5GC).

Model A: CAPIF integration with SCEF and NEF

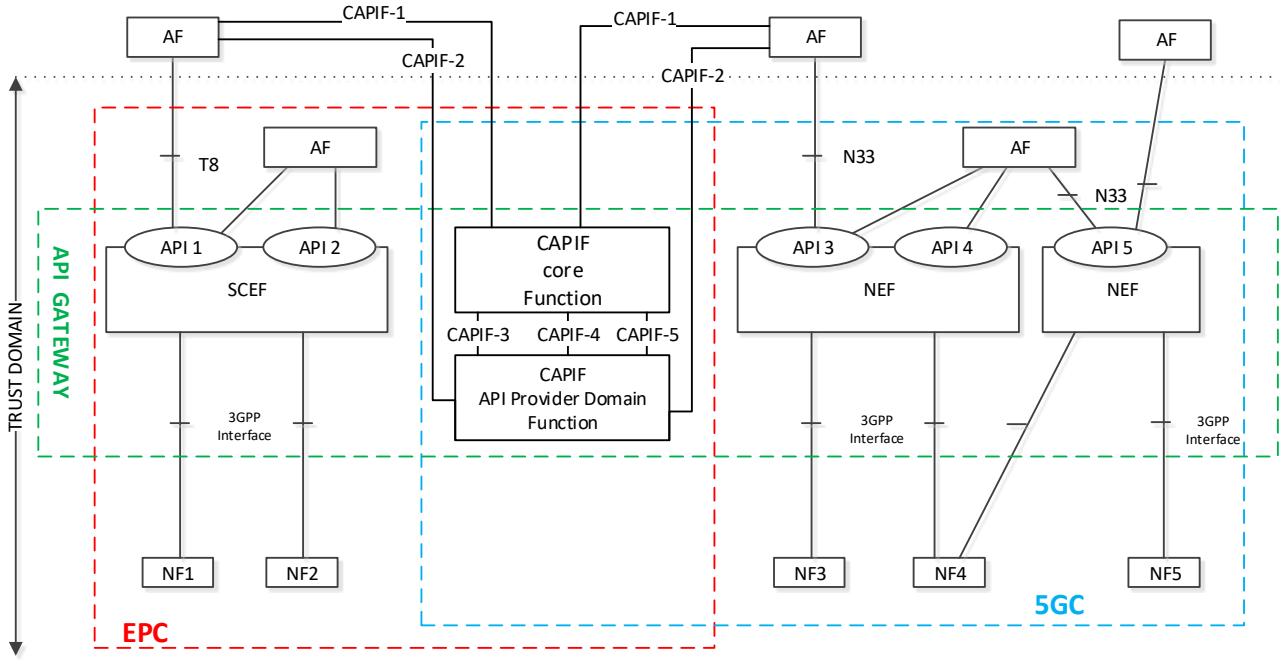

- Features of Model A
  - CAPIF framework functions, SCEF and NEF are co-located in one box called API Gateway.
  - No open interface between CAPIF Functions and SCEF/NEF

Model B: CAPIF integration with SCEF and NEF

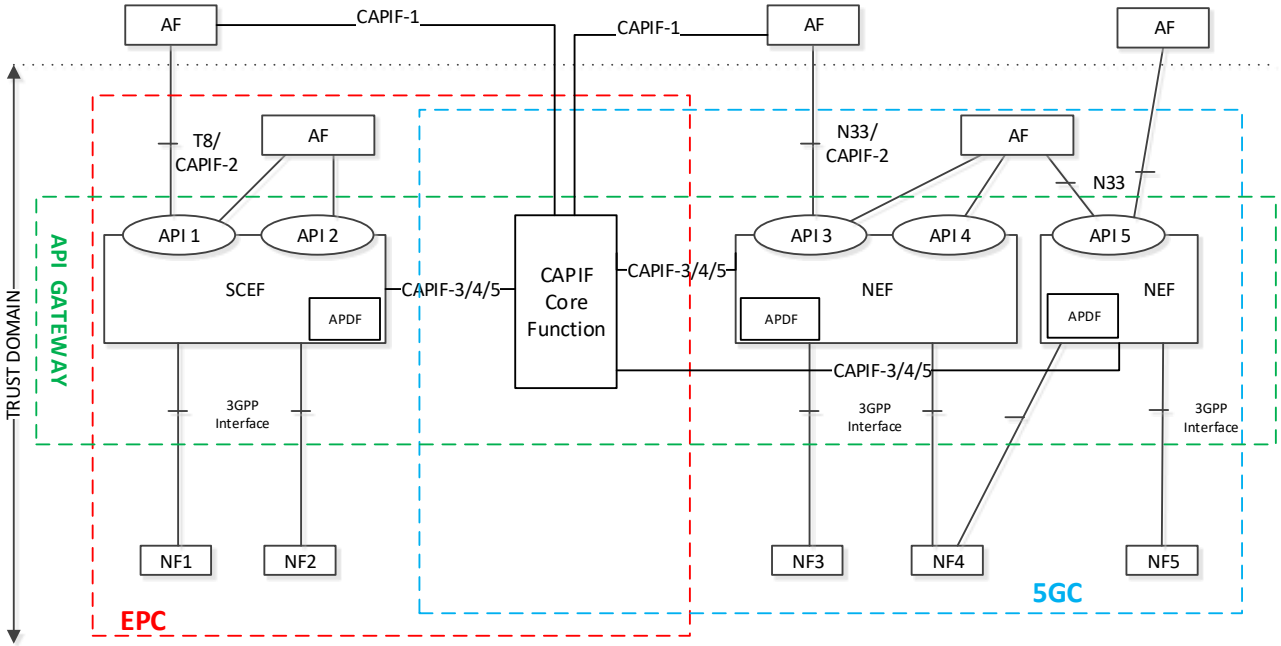

- Features of Model B
  - CAPIF Core Function (CCF), SCEF and NEF are co-located in one box API Gateway
  - SCEF/NEF implements the functionality of API Provider Domain Function (APDF)
  - SCEF/NEF interfaces with CCF via CAPIF 3/4/5 interfaces

Model C: CAPIF integration with SCEF and NEF

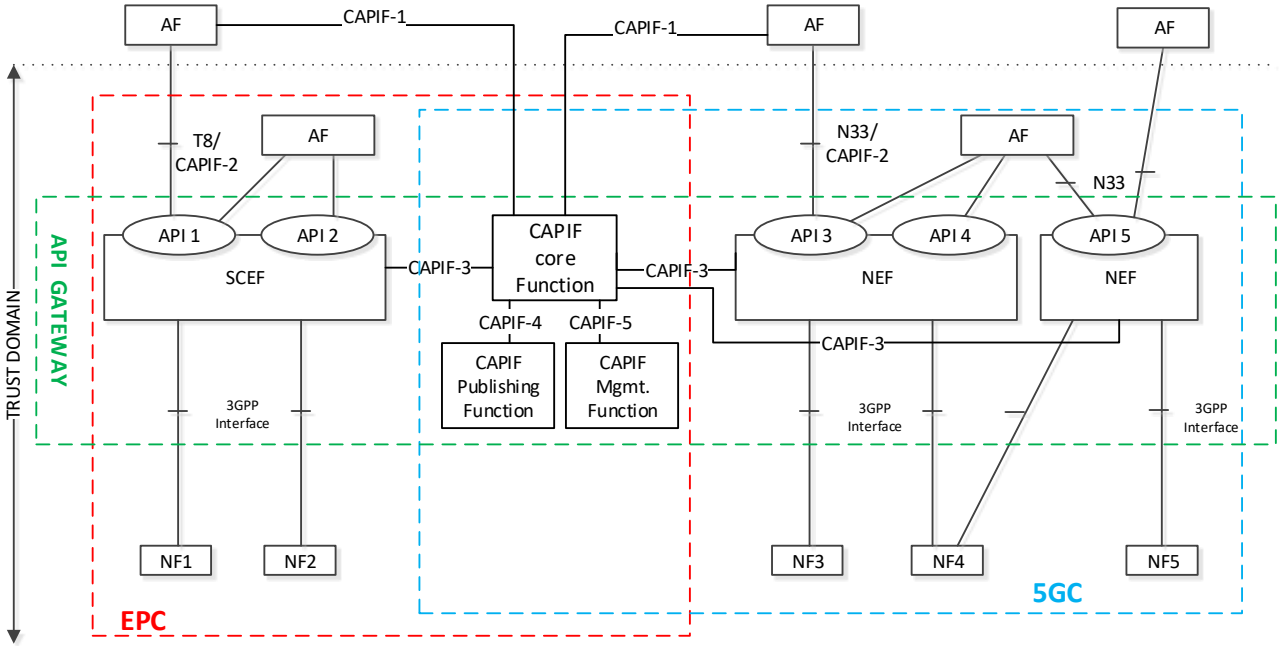

- Features of Model C
  - CAPIF Core Function (CCF), CAPIF Publishing Function (CPF), CAPIF Management Function (CMF), SCEF and NEF are co-located in one box API Gateway
  - SCEF/NEF implements the functionality of CAPIF API Exposure Function (AEF)
  - SCEF/NEF interfaces with CCF via CAPIF 3 interface

Comparison

- **Model A** follows loose integration model and therefore benefits with independent development of SCEF/NEF functionality in SA2 and CAPIF framework in SA6. However this may lead to duplication of certain functionality among SCEF/NEF and CAPIF functional entities.

- **Model B** follows tight integration model and therefore benefits with no duplication of functionality among SCEF/NEF and CAPIF. However this may creates a situation where the architecture of SCEF/NEF is being defined by two WGs (SA2 and SA6).

- **Model C** follows semi tight integration model in between Model A and Model B. SCEF/NEF only provides CAPIF API Exposure Function and therefore benefits with no duplication of functionality among SCEF/NEF and CAPIF. However this may also creates a situation where the exposure architecture of SCEF/NEF is being defined by two WGs (SA2 and SA6).

- **Open Issue**: Determine whether Model A, or Model B, or Mode C, or any combination thereof is most suitable for CAPIF integration with SCEF and NEF.

intel®