ATIS Inter-Carrier VoIP Call Routing (IVCR) Assessment and Work Plan

February 2008

ATIS is a technical planning and standards development organization that is committed to rapidly developing and promoting technical and operations standards for the communications and related information technologies industry worldwide using a pragmatic, flexible and open approach. Over 1,100 participants from more than 350 communications companies are active in ATIS' 22 industry committees, and its Incubator Solutions Program.

< http://www.atis.org/ >

The ATIS Inter-Carrier VoIP Call Routing (IVCR), Assessment and Work Plan is an ***ATIS Work Plan*** developed by the **Inter-Carrier VoIP Call Routing Focus Group** for the **TOPS COUNCIL**.

This document is a *work in progress* and subject to change.

Published by
Alliance for Telecommunications Industry Solutions
1200 G Street, NW, Suite 500
Washington, DC 20005

Copyright © 2008 by Alliance for Telecommunications Industry Solutions
All rights reserved.

No part of this publication may be reproduced in any form, in an electronic retrieval system or otherwise, without the prior written permission of the publisher. For information contact ATIS at 202.628.6380. ATIS is online at
< http://www.atis.org >.

Printed in the United States of America.

Table of Contents

EXECUTIVE SUMMARY **5**

1 INTRODUCTION **6**
1.1 BACKGROUND 6
1.2 WORKING ASSUMPTIONS 6

2 REFERENCE MODELS **7**
2.1 GENERAL REFERENCE MODEL FOR INTER-CARRIER VOIP CALL ROUTING -- EXTERNAL AUTHORITATIVE ROUTING REGISTRY 8
2.1.1 General Reference Model- Separate IP Routing Databases *8*
2.1.2 General Reference Model- Shared IP Routing Database *11*
2.2 BILATERAL INTERCONNECTION MODEL - INTERNAL AUTHORITATIVE ROUTING REGISTRY11
2.3 CENTRALIZED UPPER TIER REGISTRY (CUTR) 12
2.4 IVCR INTERFACES 13
2.5 DATABASE SEARCH SEQUENCE 13

3 ALTERNATIVE IMPLEMENTATION APPROACHES **15**
3.1 REGISTRY INTERWORKING USING EXCHANGE OF POINTERS (APPROACH X) 15
3.2 REGISTRY INTERWORKING USING EXCHANGE OF TN/ URI RECORDS (APPROACH Y) 17
3.3 IP ROUTING DATABASE CALL SETUP CC1 ENUM LLC 18
3.3.1 Calls within a Single Federation *19*
3.3.2 Calls Between Federations *20*
3.4 CUTR USE CASES 23
3.4.1 CUTR-Option 1 ..... *23*
3.4.2 CUTR- Option 2 ..... *24*
3.4.3 CUTR- Option 3 ..... *26*

4 TRANSIT NETWORKS **27**

5 ASSESSMENT OF INTERCONNECT AREAS **29**
5.1 SIGNALING AND MEDIA TRANSPORT 29
5.1.1 Assessment *29*
5.1.2 Action *30*
5.2 SECURITY 30
5.2.1 Assessment *30*
5.2.2 Action *30*
5.3 PUBLIC SAFETY 31
5.3.1 E9-1-1 ..... *31*
5.3.2 Lawfully Authorized Electronic Surveillance (LAES) *31*
5.4 EMERGENCY SERVICES 32
5.4.1 Assessment *32*
5.4.2 Action *32*
5.5 PROVISIONING 32
5.5.1 Assessment *32*
5.5.2 Action *33*
5.6 BILLING/SETTLEMENTS 33
5.7 OPERATION SUPPORT SYSTEM (OSS) INTERCONNECTION 33
5.7.1 Assessment *33*

5.7.2 Action *35*
5.8 ENUM-RELATED ASSESSMENT 35
5.8.1 ENUM Characteristics *35*
5.8.2 Address of Record/Interconnect Points *37*
5.8.3 Naming Convention *38*
5.8.4 Action *38*
5.9 ALTERNATIVES TO ENUM 39
5.9.1 Assessment *39*
5.9.2 Action *39*
5.10 MULTI-MEDIA SERVICES 39
5.10.1 Assessment *39*
5.10.2 Action *40*
5.11 QUALITY OF SERVICE (QOS) 40
5.11.1 Assessment *40*
5.11.2 Action *40*
5.12 EXCHANGE OF DATA ACROSS REGISTRIES 41
5.12.1 Assessment *41*
5.12.2 Action *43*
5.13 CENTRALIZED UPPER TIER REGISTRY (CUTR) 43
5.13.1 Assessment *43*
5.13.2 Action *43*
5.14 INDUSTRY IMPLEMENTATION APPROACH 43
5.14.1 Assessment *43*
5.14.2 Action *43*
5.15 INTERFACES 44
5.15.1 Assessment *44*
5.15.2 Action *44*
5.16 ROUTING INFORMATION 44
5.16.1 Bilateral Interconnection *45*
5.16.2 Transit Networks *45*
5.16.3 International Interconnection *45*
5.17 INTER-NETWORK MANAGEMENT 46
5.17.1 Assessment *46*
5.17.2 Action *46*

6 CONCLUSIONS 46

APPENDIX A: PUBLIC SAFETY AND EMERGENCY SERVICES 48
A.1 PUBLIC SAFETY 48
A.1.1 E9-1-1 ..... *48*
A.1.2 Lawfully Authorized Electronic Surveillance (LAES) *49*
A.2 EMERGENCY SERVICES 50

APPENDIX B: DEFINITIONS 53

APPENDIX C: VOIP WORKPLAN UPDATE 54

APPENDIX D: ACRONYMS 55

APPENDIX E: IVCR FOCUS GROUP MEMBERS 59

EXECUTIVE SUMMARY

As carriers acquire a significant base of Voice over Internet Protocol (VoIP) customers and migrate their network equipment to IP technology, it is critical for carriers to interconnect using VoIP instead of legacy PTSN/circuit switched routing technology.

In response to the need for investigation of the issues associated with call routing for inter-provider VoIP connection, the Alliance for Telecommunication Industry Solutions (ATIS) Technical and Operations (TOPS) Council formed the Inter-Carrier VoIP Call Routing Focus Group (IVCR-FG) in February 2007.

In order to better understand inter-provider VoIP interconnection issues (e.g., standards gaps), the IVCR-FG developed architecture reference models and exercised those models through call flows and alternative implementation approaches. These reference models and alternative implementation approaches include call routing options with:

- Single and multiple routing databases (both external and internal to the carrier);
- Single and multiple federations; and
- Horizontally- and hierarchically-related registry databases.

The Focus Group (FG) also considered intermediate Transit Networks involved at the call routing level.

The IVCR-FG identified five potential different alternative implementation approaches for Inter-Carrier VoIP Call Routing: Registry Interworking Using Exchange of Pointers, Registry Interworking Using Exchange of Transit Networks/Uniform Resource Identifier (TN/URI) records, IP Routing Database Call Setup Country Code 1 (CC1) E Number Working Group (ENUM LLC) and a Centralized Upper Tier Registry.

No specific implementation approach is explicitly or implicitly endorsed by IVCR-FG as the preferred approach to call routing and the alternative implementation approaches presented in this workplan are strictly to demonstrate potential applications of the IVCR reference models and interfaces in order to identify standards gaps.

The IVCR-FG also identified and assessed several functional areas that affect interconnection. Some of these areas include: Signaling & Media Transport, Security, Emergency Services, Public Safety, Performance (Quality of Service (QoS)) and Provisioning (additional detail on these and other areas can be found in Section 5). The FG examined how interconnection may be affected by each of these areas and identified where standards development or monitoring of other standards related activities should occur. Actions are specified throughout Section 5.

Based upon its assessment, the IVCR-FG's key conclusions are:

- Standards programs are in place to provide the fundamental interface standards required to support any implementation alternative.
- The key standards gaps that need to be addressed are related to registry provisioning and ENUM service types (e.g., to distinguish between a gateway vs. an end-user).
- A broad consensus across industry stakeholders is required in order to select a specific call routing implementation alternative; an industry workshop in 2008 is proposed as the starting point to achieve this.

1 INTRODUCTION

1.1 Background

The Alliance for Telecommunication Industry Solutions (ATIS) TOPS Council commissioned the formation of the Inter-Carrier Voice over Internet Protocol (VoIP) Call Routing Focus Group (IVCR-FG) to identify or define interconnection databases as well as determine what needs to be embodied in agreements between operators to ensure interconnection and interoperability with respect to VoIP interconnect conventions. These efforts include identifying or defining interconnection databases as well as determining what needs to be embodied in agreements between operators, such as Network-to-Network Interface (NNI) specifications, Quality of Service (QoS) markings, and topologies of such interconnects.

While protocols and mechanisms such as Provider (Infrastructure/Carrier) ENUM are being developed to aid VoIP service providers with database lookup aspects of inter-carrier call (E.164) routing, no mechanisms, procedures, or widespread carrier agreements have yet emerged for consistently and globally populating and using these databases. A number of vendor proposals have been (and continue to be) made, but no initiative exists to develop the necessary standards and agreements between VoIP providers that will be needed to enable universal, public VoIP call interconnectivity.

The work conducted by the IVCR-FG was geared towards defining action to ensure interoperability of voice applications over IP connectivity among the service provider and equipment vendor community. Analysis conducted by the IVCR-FG and decisions made regarding the implementation of interoperability of applications over IP is not limited to just voice. In the end, decisions about network and architecture need to weigh the requirements for voice interoperability with the needs of other current and near-term IP applications as well as future extensibility. While it was not the goal of the IVCR-FG to solve interoperability for all application types, the assessments, conclusions and resulting work items in this work plan may have a direct impact on other IP applications.

It is recognized that the ATIS Packet Technologies & Systems Committee–Signaling Architecture and Control Subcommittee (PTSC-SAC) initiated work on inter-carrier VoIP call routing (PTSC Issue S0025 - NNI Numbering and Routing Capabilities and Procedures) within a more general work program on Network-Network Interconnect for VoIP and multimedia services. The IVCR-FG used this work as a basis of its broader exploration of the topic. In turn, the work items from this report are expected to help guide the continuation of the PTSC-SAC work, as well as work in other relevant ATIS committees and other SDOs.

1.2 Working Assumptions

In order to frame the analysis the following working assumptions were documented:

- Any solution for IVCR includes the Public Switched Telephone Network (PSTN) as an alternate interconnect path, however the objective is to route the call over IP.

- The E.164 telephone numbering scheme is the basis for endpoint identification, however it does not preclude alternate means of identification.
- The inter-carrier signaling protocol for call delivery/session control is assumed to be, but not limited to Session Initiation Protocol (SIP).[1] Other options are not precluded.
- Database provisioning functions must be considered in the assessment and development of a solution for VoIP call routing.
- Billing must be considered at a high level in the assessment and development of a solution of VoIP call routing.
- Existing authoritative databases for E.164 numbers (e.g. Local Exchange Routing Guide (LERG), Number Portability Administration Center (NPAC)) are the ultimate authority on their functional areas. Potential changes to these authoritative databases are out of scope for this focus group.
- Future databases may interface with these existing authoritative databases for use of their authoritative data.
- The long term solution, for E.164 address resolution is ENUM technology (RFC 3761), including a Domain Name System (DNS) type interface for network-registry database queries. This solution is being defined by ATIS PTSC-SAC. In the near term, it is recognized that SIP redirect implementations can also provide equivalent functionality.
- Consistent with PTSC's Sessions/Border Control Functions and Requirements, gateway functionality may consist of:
    - Bilateral billing/settlement arrangements and policies for VoIP traffic.
    - Differentiated security policies for VoIP (for example ACLs and/or means for authenticating the peering Gateway or Carrier).
    - Differentiated QoS policies possibly in association with bandwidth policing.
    - Means for protecting against Denial of Service (DoS) attacks.

2 REFERENCE MODELS

The Focus Group developed the following reference models to better understand different call routing scenarios when multiple IP routing databases are involved. The accompanying description of the reference models explains each component. See Section 3 for alternative implementation approaches that exercise the IVCR reference models and interfaces in order to identify standards gaps. It should be noted that the alternative implementation approaches are presented strictly to demonstrate potential applications of the IVCR reference models and

[1] The ATIS VoIP NNI American National Standard (ANS) ATIS-1000009.2006 specifies the nature of the network-network interface that Carriers will use for the call signaling and media connectivity. The NNI ANS specifies the use of SIP for call signaling, and indicates which aspects of SIP are mandatory or optional. It also specifies protocol options for the transport of SIP signaling, address formats, the use of Real time Transport Protocol (RTP) for passing the media, and deals with other media aspects such as codecs, passing Dual-Tone Multifrequency (DTMF), fax, and sharing media performance information

interfaces in order to identify standards gaps. No specific implementation approach is explicitly or implicitly endorsed by ATIS as the preferred approach to call routing.

2.1 General Reference Model for Inter-carrier VoIP Call Routing -- External Authoritative Routing Registry

Figures 1 and 2 below provide a general reference model for Inter-carrier VoIP Call Routing. Figure 1 shows the case where Carriers A and B use separate external authoritative routing registries and Figure 2 shows the case where Carriers A and B use the same routing registry.

2.1.1 General Reference Model- Separate IP Routing Databases

The description in this section will be devoted to Figure 1. Figure 2 can then be readily understood as an obvious simplification of Figure 1. Elements in the figures should be taken as logical, not physical. For example, a database may be physically distributed.

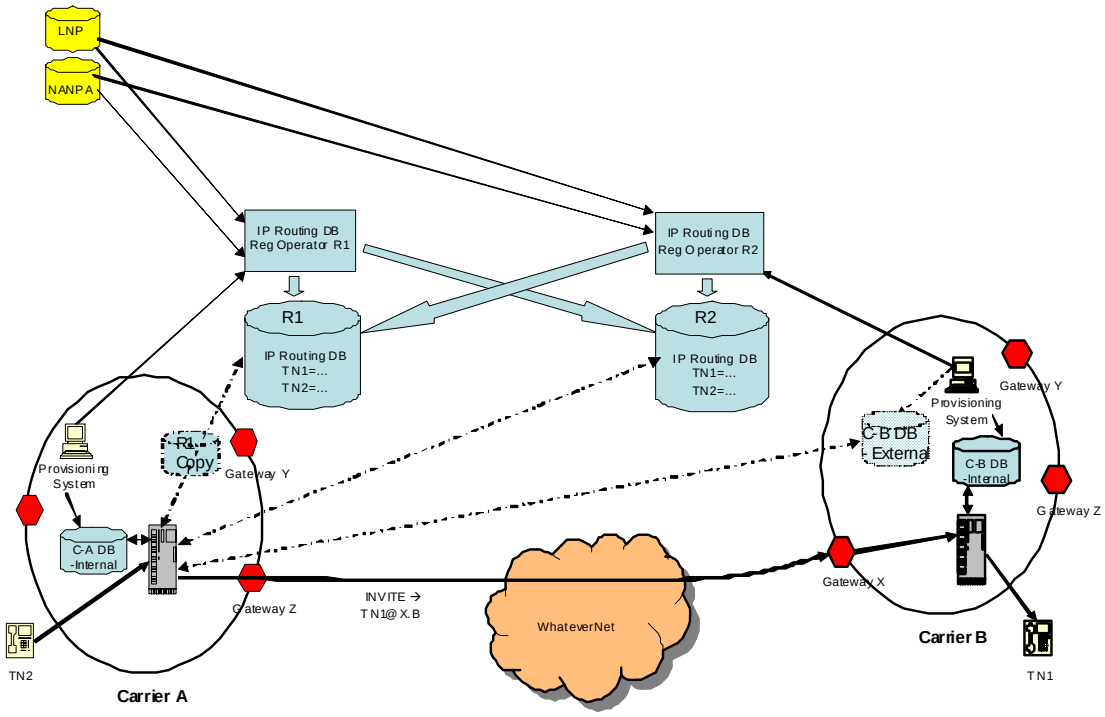

Figure 1. General Reference Model – Separate IP Routing DBs

Figure 1 depicts elements that may be involved in routing a call attempt *from* Carrier A *to* Carrier B, where Carrier A and B have different external authoritative routing registries (R1 and R2, respectively). TN2 is calling TN1, and so Carrier A is to discover that Carrier B (and not some other carrier) is to receive the call, and in particular which ingress gateway of Carrier B to use. In subsequent sections, use cases with call flows describe in greater detail how the general reference model may be exercised. Regardless of the use case, the following fundamentals apply in Figure 1:

a. When TN2 initiates a call to TN1, Carrier A first determines through its own local database C-A DB-Internal that TN1 belongs not to it, and therefore to another carrier.

b. Carrier A next queries one or more databases (R1 Copy, R1, R2, C-B DB-External) that will result in discovering for TN1 a URI indicating the carrier and its particular ingress gateway to send the call to. In Figure 1, that is Gateway X of Carrier B.

c. Carrier A next offers the call to Carrier B, illustrated by the SIP INVITE with URI TN1@X.B in the figure.

d. Once Carrier B receives the call, it uses its own local database C-B DB-Internal to determine that TN1 belongs to it, and delivers the call to TN1.

The descriptions below amplify further on elements in Figure 1:

- C-A DB-Internal – Carrier A Database: This database deployed within Carrier A's network contains the E.164 numbers assigned to Carrier A's end users (e.g., TN2 in the figure) and the associated routing data for routing calls internally within Carrier A's network. It is depicted as a separate functional entity and query from the R1 Copy (i.e., Carrier A copy of IP Routing DB R1), but may be contained physically within the same database element.

  Carrier A would check this database first. In the case of a call to TN1 that is served by another carrier (Carrier B), Carrier A would only find out that TN1 is not served by it, and so a query to another database is needed.

- IP Routing DB R1: Refers to the external authoritative routing registry that Carrier A uses for completing calls to other carriers. Carrier A may query this database with an E.164 telephone number, and receive back either

  - a URI of an ingress routing gateway of Carrier B (e.g., Gateway X in Figure 1) that should receive the call, or
  - a URI of another routing database, such as R2 or C-B DB-External in Figure 1.

    This registry may also be capable of identifying a different ingress gateway URI or another routing database URI for the same TN, based on a policy of the provider that 'owns' that TN, in order to support different routes based on carrier of origin. For example, Carrier B may wish to set policy with the registry such that Carrier A receives the URI of their Gateway X for TN1, while Carrier C receives the URI of their Gateway Y for TN1.

  The arrow from IP Routing DB Registry Operator R2 to IP Routing DB R1 represents the provisioning flow of whatever routing information Carrier B chooses to and is allowed to provide in R1.

- R1 Copy: Refers to an optional local store within Carrier A of a copy of IP Routing DB R1 information that Carrier A is allowed to have, and is obtained and updated from IP Routing DB R1/provisioning system. When utilized by Carrier A, it means that the external IP Routing Database R1 is not queried. The dashed line in Figure 1 through R1 Copy is meant to illustrate that either R1 Copy or R1 is queried, but not both. It is Carrier A's choice whether to have such a database.

- C-B DB-Internal – Carrier B Database: Is to Carrier B as the C-A DB-Internal is to Carrier A. Thus in a call flow from Carrier A toward TN1, once the call reaches Carrier B, this database shows TN1 as being supported by Carrier B.
- IP Routing DB R2: Is an external authoritative registry that may be queried by Carrier A and contains Carrier B-related routing information populated by Carrier B. When queried by Carrier A, it would return a URI of an ingress gateway for Carrier B, or possibly a URI for C-B DB-External described below. As with R1, R2 may contain policies that point calls from different Carriers (Carrier A or Carrier C) to different Carrier B ingress gateways (Gateway X or Gateway Y).
- C-B DB-External: Refers to an optional routing database within Carrier B that may be queried by Carrier A. The query response would contain a URI for the ingress gateway of Carrier B to use for the call attempt (e.g., Gateway X). The purpose of this network-owned database may be to allow Carrier B to exercise even further control over the choice of ingress gateway, for example depending on load factors or type of call. Note that C-B DB-External is not a local copy of IP Routing DB R2. It is Carrier B's choice whether to have such a database.
- LNP – Local Number Portability: This database contains ported and pooled E.164 number data and is used by the IP Routing DB Registry Operator in order to identify the carrier of record for ported and pooled numbers.
- NANPA – North American Numbering Plan Administrator: This database identifies the Carriers assigned Numbering Plan Area (NPA)-NXX codes (blocks of 10K numbers).
- Whatever.net: Illustrates a IP network that may be in the call path between Carrier A and Carrier B, but is not involved in any *call* routing-related concerns.

Carrier B decides what level/type of information to expose to Carrier A in external databases. For example, in R1, for any given TN supported by Carrier B, Carrier B may decide to expose a URI for one of its ingress gateways, or a URI for another database such as R2 or C-B DB-External. In database R2, Carrier B may choose to expose a URI for one of its ingress gateways, or a URI for C-B DB-External.

NOTE: Figure 1 illustrates the functional components deployed within a carrier network (identified here as "Carrier A"). This diagram shows two distinct routing databases, C-A DB-Internal and R1 Copy, and so there would be separate queries to each database. The first database identifies the target address for all telephone numbers within the Carrier A network. The second database identifies the IP interconnect point for telephone numbers that are not within the Carrier A network. One possible technology for these databases is ENUM and I-ENUM.

Although Figure 1 clearly shows these as two distinct databases, there have been suggestions that it may be more efficient if they are combined into a single database, accessible via a single query. But before this can be considered, it is important to understand the different ways the two types of data are used. A target address is used to update the To header in the SIP invite, while an IP interconnect point is used to update the Route header in the SIP invite. Therefore it must be possible to unambiguously determine whether the response contains a target address or an IP

interconnect point, to update the correct SIP header. Keeping these databases separate, makes it possible to unambiguously determine the data type purely on the basis of which database was queried. Currently, ENUM does not contain a mechanism to differentiate between target address and IP interconnect data in the same ENUM database. Therefore, the current requirement is that separate databases MUST be used for target address and IP interconnect point, and these databases MUST be queried with separate ENUM queries.

2.1.2 General Reference Model- Shared IP Routing Database

As stated above, Figure 2 (below) shows the case where Carrier A and Carrier B share the same registry (i.e., Carrier A and Carrier B are in the same federation). Figure 2 applies to both the scenario where there is a single registry shared by all VoIP carriers within the United States, (i.e., a single domestic federation), and the scenario of multiple domestic federations.

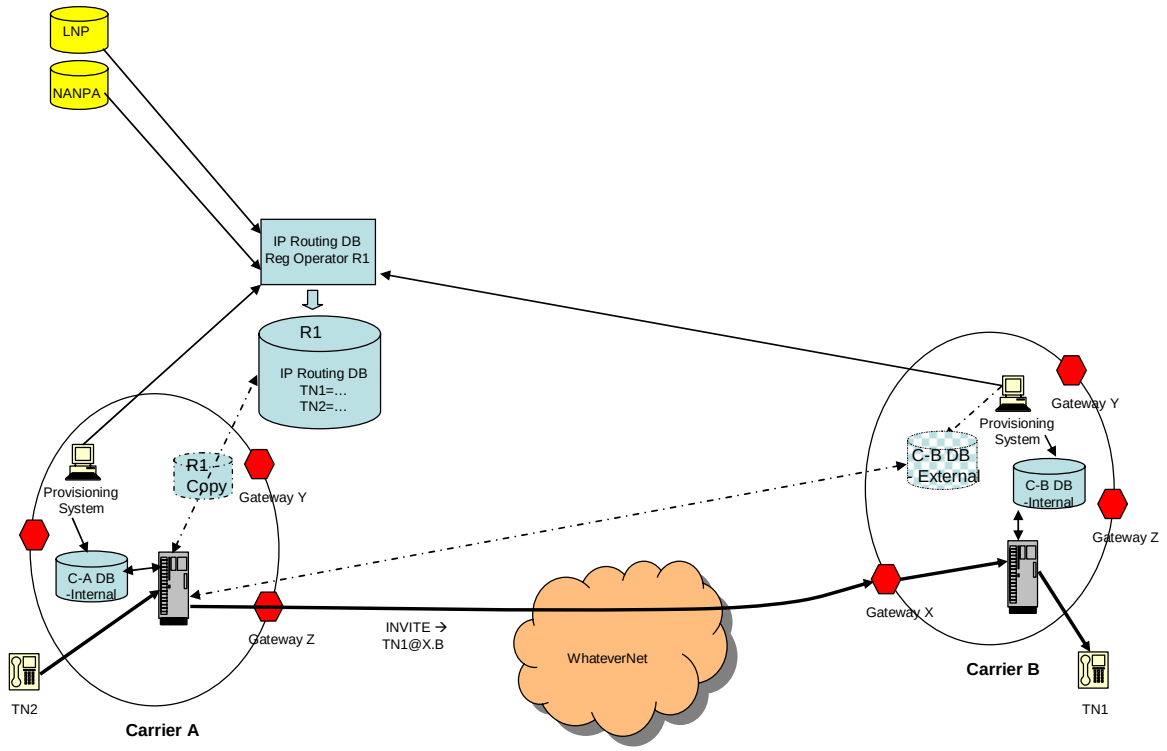

Figure 2. General Reference Model – Shared IP Routing DB

2.2 Bilateral Interconnection Model - Internal Authoritative Routing Registry

In the previous section the routing registry was managed external to the carrier. In a reduced model discussed in this section, the carrier may have an internal authoritative routing registry within the carrier network. In this case the R1 copy may not exist and the interfaces to NANPA and LNP databases are to the carrier's internal IP routing database. This reduced model with a carrier internal Routing Registry might typically be used for bilateral carrier interconnection.

The descriptive text for the reference models in figures 1 and 2 in the previous section may be used to describe the reduced bilateral interconnection model as well, with the understanding that the IP routing DB may reside within the carrier. In this case the arrows depicted between the Registry operators are actually between the carriers since these databases reside in the carrier network. They represent the provisioning flow of whatever routing information Carrier B chooses to, and is allowed to provide in the registry DB of Carrier A and visa versa.

All the standards and gaps discussed in this document are applicable to the general reference model and the reduced bilateral interconnect version of this reference model.

2.3 Centralized Upper Tier Registry (CUTR)

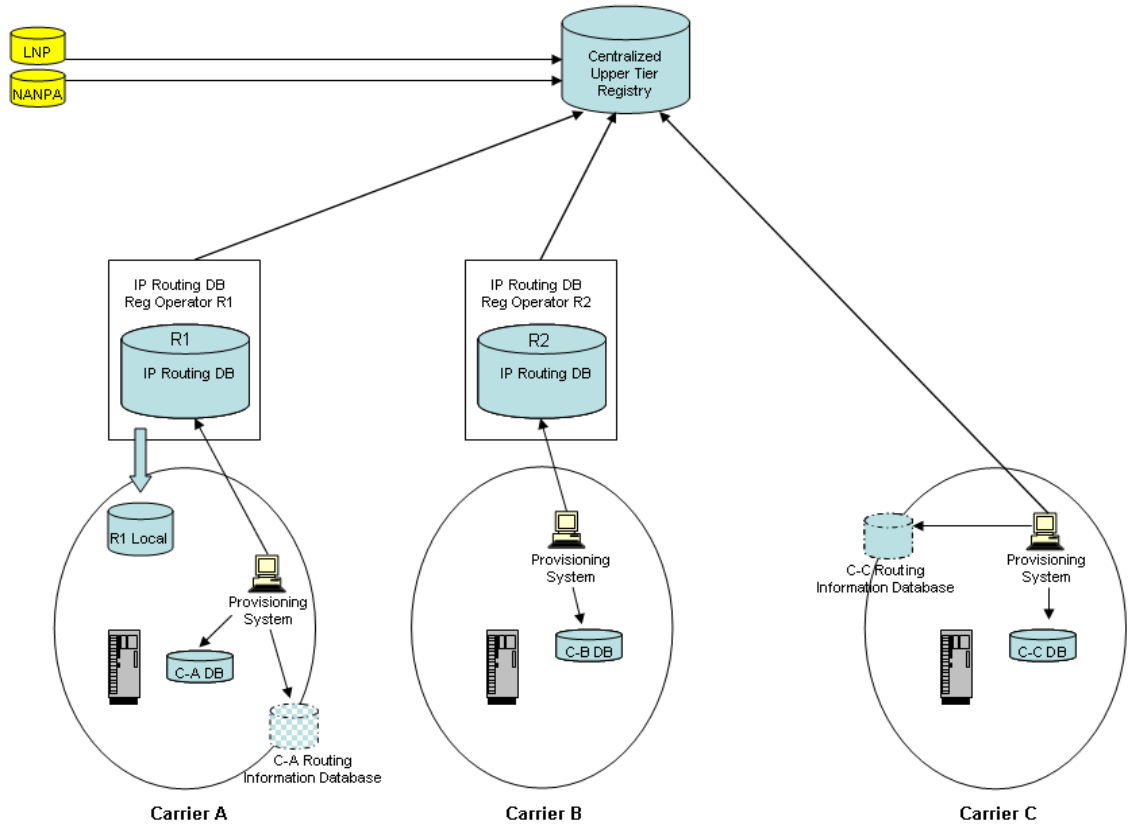

Figure 3. CUTR Reference Model

For the Centralized Upper Tier Registry (CUTR) Reference Model, every VoIP provider would provision its TNs, either directly or via its chosen registry operator, into the CUTR. This CUTR would identify the next level registries or carrier-specific databases to be queried in order to ultimately discover the necessary routing information (i.e., ingress interconnect point) to route a call to a carrier's IP endpoints. This CUTR would not necessarily, but could, identify ingress interconnect points associated with the TNs contained within it. The Figure 3 diagram shows three carriers, each using different database management and access models:

1) Carrier A subscribes to Registry 1's service but maintains its own routing information database. Carrier A also maintains its own copy of the Registry 1 database supporting calls to numbers maintained by Registry 1.
2) Carrier B subscribes to Registry 2's service and provisions routing information directly in Registry 2's database. Carrier B directly queries the Registry 2 database for outgoing calls, rather than maintain a local copy.
3) Carrier C maintains its own routing information database for other carriers to query, and provisions identification of that database directly in the CUTR. It may query the CUTR directly for identification of registries/databases associated with numbers for outgoing calls or maintain a local copy of the CUTR database (local copy option not shown in diagram).

The entities performing Registry 1 or Registry 2 functions could be private companies, federations, or consortia.

2.4 IVCR Interfaces

A key part of the reference models are interfaces. There are five categories of fundamental inter-carrier/inter-entity interfaces in the reference model:

1) The network-to-network interface: This provides for call completion from one carrier to another. This interface is specified by the ATIS VoIP NNI ANS, which uses SIP for session establishment.
2) The registry database query interface: The long term solution is assumed to be the ENUM interface. Near term, other alternatives such as SIP may be employed as well.
3) Registry database provisioning interfaces: This provides for provisioning records into registry databases, both within a federation and across federations.
4) Authority database interfaces: This provides for NANPA and LNP for validation of number ownership by the carrier provisioning a record. Current industry implementations use Telcordia's LERG Routing Guide and data from the NPAC, and those may suffice going forward.
5) The registry-to-registry provisioning interface: This interface facilitates registry interworking between registries to exchange routing data:

As can be seen from the reference models, all IVCR interfaces fit into these categories and can be used to support a wide array of implementations.

2.5 Database Search Sequence

The focus of this model is on the sequence of databases and registries which may be potentially queried, and their order. It is possible for the search to end when the desired data (identification of ingress point) is reached. It is possible for the search to skip a registry or

database if a previous database or registry query result points to a subsequent database or registry.

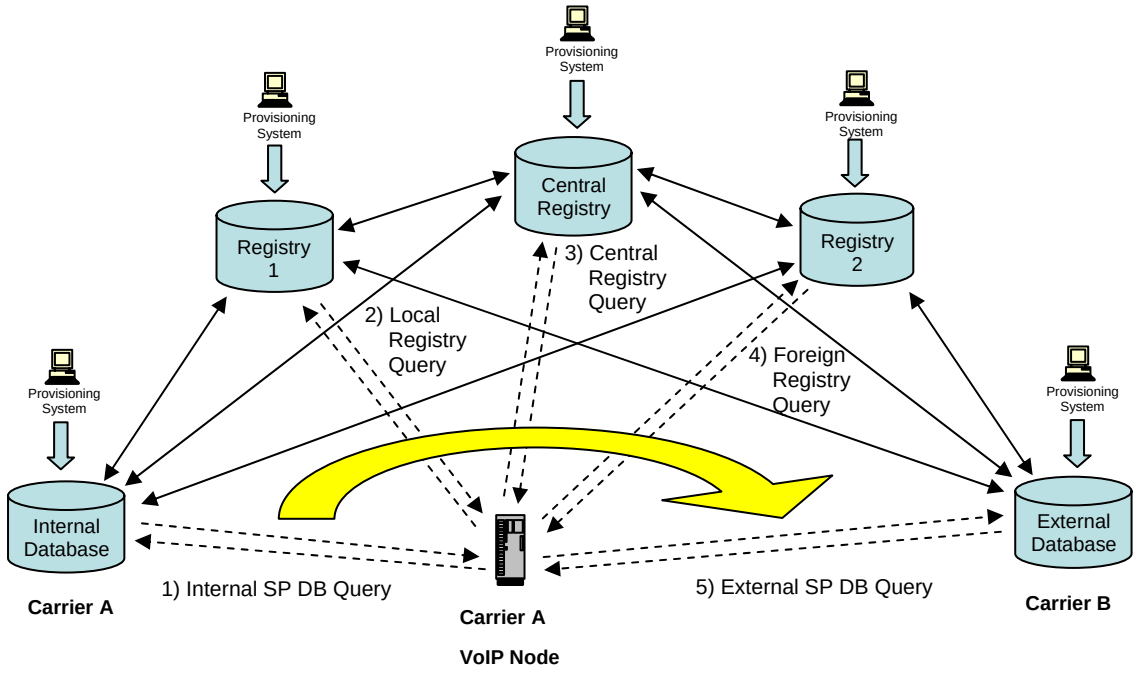

Figure 4 – Search Algorithm for Walking Through the Registries and Databases

The colored lines represent possible direct positioning of data through provisioning. The solid black lines depict possible exchanges of data amongst databases and registries. The dotted lines represent queries by a VoIP node. The Central Registry provides a TN to Registry or Carrier B External DB pointer, depending on Carrier B intent. Registry 1 may point to Registry 2 or to Carrier B External DB. Registry 2 may point to Carrier B External DB.

Deterministic query sets always follow the same sequence, but may skip a query based on data returned from a previous query. Queries use the target TN as the key to the request. The result may be either a pointer to registry, external database, or ingress gateway. A query set is complete when the ingress Gateway (GW) is found.

Sequence:

1) Terminates if found locally in Carrier A Internal DB
2) Terminates if found in same Federation (Registry 1)
3) Points to either Registry 2 or Carrier B External DB depending on Carrier B choice
4) Points to Carrier B External DB or automatically skipped if result of 3 has done so
5) Carrier B External DB provides ingress GW

Assumptions of this model are:

1) E.164 (and other) numbering authorities require a hierarchical distribution of the number space to carriers in order to maintain global uniqueness.
2) Originating and terminating carriers are not required to subscribe to the same registry; therefore more than one is possible.
3) Originating carriers desire to do internal searches before external searches in order to minimize potential database dip costs.
4) Terminating carriers desire to minimize topological information about their VoIP network from being exposed externally. (This does not prevent some from doing so, but merely notes that an algorithm must take this into account.)
5) Carriers will maintain strict control of exposure of database access and identification of border elements.
6) Terminating carriers may desire to maintain their TN to ingress point information in a registry or in an externally visible database.
7) An upper tier centralized registry is needed to bootstrap the process by identifying which carrier owns a given E.164 number, i.e., a skinny top registry (i.e., CUTR). Without such a registry, any sequence will break once local knowledge is exceeded.

3 ALTERNATIVE IMPLEMENTATION APPROACHES

The alternative implementation approaches in this section are presented strictly to demonstrate potential applications of the IVCR reference models and interfaces in order to identify standards gaps. No specific implementation approach is explicitly or implicitly endorsed by ATIS as the preferred approach to call routing.

The IVCR-FG identified five potential different alternative implementation approaches for Inter-Carrier VoIP Call Routing: Registry Interworking Using Exchange of Pointers, Registry Interworking Using Exchange of TN/URI records, IP Routing Database Call Setup CC1 ENUM LLC and a Centralized Upper Tier Registry. Issues concerning interworking between the approaches using the Exchange of Pointers, Exchange of TN/URI records, and ENUM LLC are identified and discussed in Section 5.14 "Exchange of Data Across Registries."

3.1 Registry Interworking Using Exchange of Pointers (Approach X)

The registry interworking depicted below shows that R1 can **import TN pointers** from R2. Use cases include:

- A query from Carrier A to R1 can access a pointer to R2. Then the second query 4/5 in the picture below is necessary.

- A query from Carrier A to a local replica downloaded from R1 can access pointers to R2. Then Carrier A would perform the second query 4/5 in the picture below.

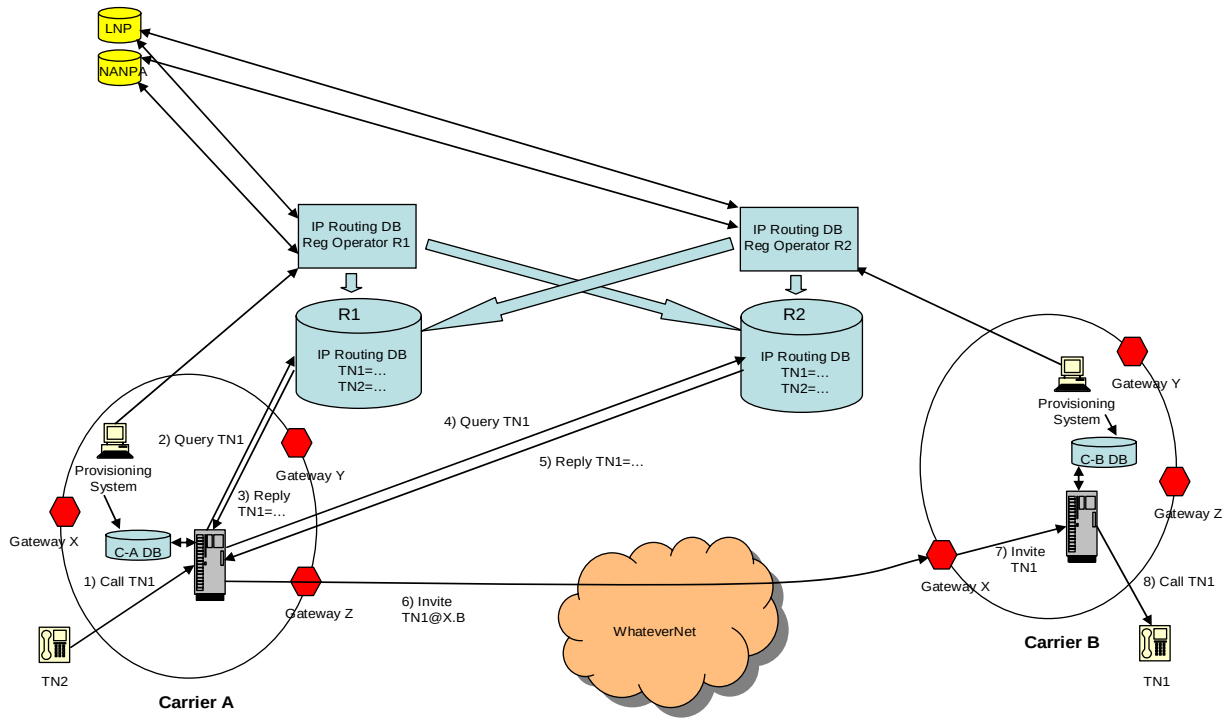

Figure 5. Registry Interworking Using Exchange of Pointers Model

Within Approach X:

- R1 and R2 must agree on a provisioning interface with each other.
- R1 and Carrier A must agree on a query interface.
- There is a need for clarity on the meaning of the routing data received by Carrier A.
- R2 and Carrier A must agree on a query interface.
- This multiple federation approach could require that each registry operator establish a cooperative relationship with all other registry operators such that each registry database, for E.164 numbers not registered in that registry, contains the URI of the registry database to which a particular E.164 number is registered by the carrier of record.

Issue: For a given TN, depending on whether R1 has the URI of an ingress point for a terminating network or a URI to be used to query R2, there needs to be some indication of the meaning of the URI so as to remove ambiguity to Carrier A in how to process the URI. The method of disambiguation could be implicit, such as expressed through the form of the URI, or explicit such as a yet to be defined service indicator. To date there is no industry standard for this method. Further, since federations that use registry interworking Approach X are not

necessarily organized along national boundaries, any chosen method must be extensible internationally.

3.2 Registry Interworking Using Exchange of TN/ URI records (Approach Y)

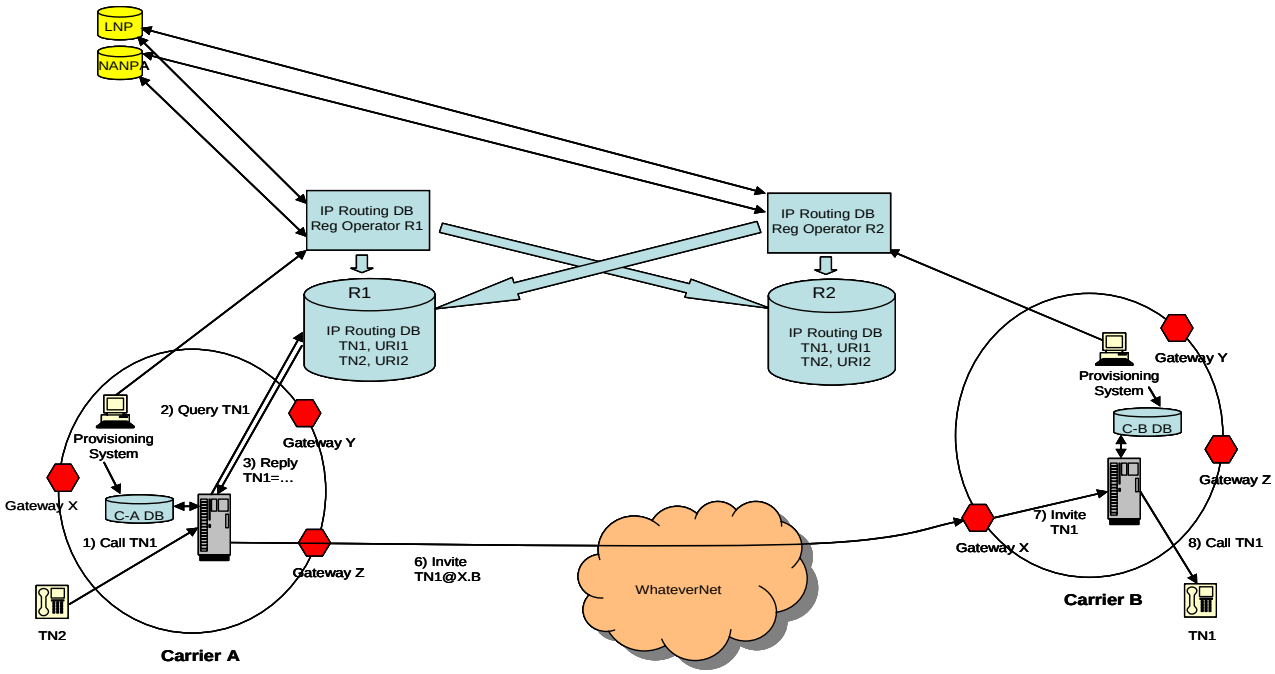

Figure 6. Registry Interworking Using Exchange of TN, URI Records Model

The registry interworking depicted above shows that R1 can **import TN, URI records** from R2. Use cases include:

- A query from Carrier A to R1 can access the data of R2. Query 4/5 in the picture for Approach X is unnecessary.
- A single query from Carrier A to a local replica downloaded from R1 can access the data of R2.

Within Approach Y:

- R1 and R2 must agree on a provisioning interface with each other.
- R1 and Carrier A must agree on a query interface.
- There is clarity on the meaning of the routing data received by carrier A. The received data consists of TN and at least one URI for an ingress point to a terminating network.
- Other agreements would include service level agreements, including policy for confidentiality of routing data.

3.3 IP Routing Database Call Setup CC1 ENUM LLC

The IP Routing Database Call Setup scenario describes a specific, proposed implementation of the generic routing data base reference model based on the Country Code 1 ENUM LLC's plan of record. As of the release of this assessment and workplan, the proposed LLC implementation plan is subject to change. This description is meant to be illustrative of the proposal and not a definitive implementation. As such, only enough information of the proposal to compare it to the reference model is included here. For a definitive description of the proposed implementation, please refer to the technical requirements contained on the LLC's web site.[2]

Underlying assumptions in the proposed implementation are:

- The LLC is planning to implement the described architecture as a means of moving forward with Provider ENUM (also known as "Carrier ENUM" or Infrastructure ENUM") between the members of the LLC and any other interested service providers of record (SPR). The LLC has stated its intention to transition its initial implementation to a US branch of a global domain, if and when industry would move in that direction.
- The use of data from the LERG and NPAC as validation sources ensure that the registering service provider has been allocated the particular number being registered. This will also ensure that portability and pooling events are taken into account.
- All participants in the LLC registry have equal rights to access the data in the registry. It is envisioned that some sort of access control mechanism will be put in place to secure the data in the registry.
- It is anticipated that SPRs will provision Tier 2 name servers for their numbers. SPRs are responsible for the reliability and performance of the Tier 2 name servers to which their numbers are delegated.
- It is also anticipated that SPRs will want to provide different interconnection points to different interconnection partners. A variety of techniques exist to accomplish this, resulting in either a differential response from Tier 2 or differential resolution by different interconnection partners of a common Tier 2 response. These considerations are not expected to affect the Tier 0/1 Registry functionality.
- It is noted that the points and terms of interconnection between SPRs are a matter for negotiation between SPRs and the Registry plays no role in this process as it provisions only National Security (NS) records delegating ENUM domains to the serving SPR.

It should be noted that the processing details within a specific service provider's network are shown only to the extent necessary to illustrate a sample call flow and are not meant to be definitive (e.g., policy enforcement).

[2] http://enumllc.com/tac/docs/prov/Provider_Tier_0_1-7.doc

3.3.1 *Calls within a Single Federation*

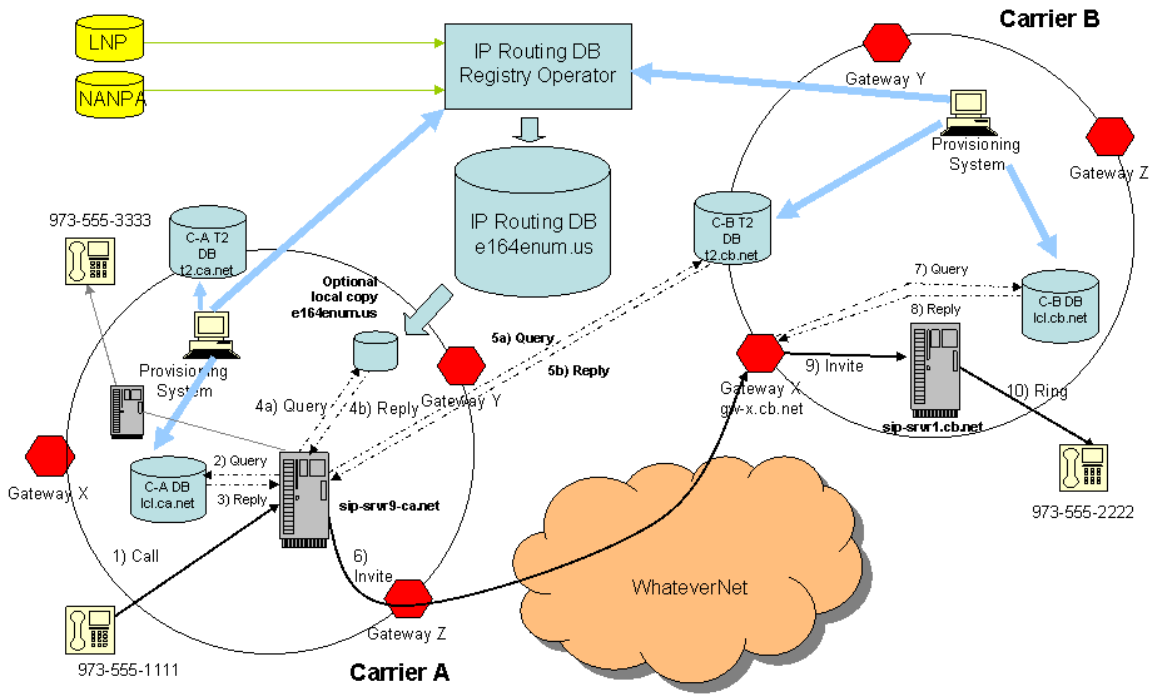

Figure 7 – Carrier A to Carrier B in a Single Federation

Additional details of the illustrative call flow in Figure 7 follows:

1) Caller Dials 555-2222; sip server converts to full E.164 number

NOTE: Although not specifically germane to the LLC's implementation, it is not anticipated that dialing plans that are currently in use would change. Some dialing plans already call for uniform 10-digit dialing. Originating SIP servers may have to account for local dialing plan variations.

2) Query 2.2.2.2.5.5.5.3.7.9.1.lcl.ca.net

3) Reply: NXDOMAIN

4a/5a) Query 2.2.2.2.5.5.5.3.7.9.1.e164enum.us[3]

4b) Reply w/ NS t2.cb.net

5b) Reply w/ NAPTR sip:+19735552222@gw-x.cb.net

6) Invite to sip:+19735552222@gw-x.cb.net

[3] Query to either the CC1 ENUM LLC Registry (5a) or an optional Local Copy (4a).

7) GW queries 2.2.2.2.5.5.5.3.7.9.1.lcl.cb.net

8) Reply w/ NAPTR sip:+19735552222@sip-srvr1.cb.net

9) Invite to +19735552222@sip-srvr1.cb.net

IP Routing DB:

```
$ORIGIN e164enum.us
   1.1.1.1.5.5.5.3.7.9.1 IN NS t2.ca.net
   2.2.2.2.5.5.5.3.7.9.1 IN NS t2.cb.net
   3.3.3.3.5.5.5.3.7.9.1 IN NS t2.ca.net
```

Carrier-A Tier 2 DB:

```
$ORIGIN 1.1.1.1.5.5.5.3.7.9.1.e164enum.us
   IN NAPTR 100 10 “u” “E2U+sip” “!^.*$!sip:+19735551111@gw-z.ca.net!”
$ORIGIN 3.3.3.3.5.5.5.3.7.9.1.e164enum.us
   IN NAPTR 100 10 “u” “E2U+sip” “!^.*$!sip:+19735553333@gw-x.ca.net!”
```

Carrier-A Internal Routing DB:

```
$ORIGIN 1.1.1.1.5.5.5.3.7.9.1.lcl.ca.net
   IN NAPTR 100 10 “u” “E2U+sip” “!^.*$!sip:+19735551111@sip-srvr9.ca.net!”
$ORIGIN 3.3.3.3.5.5.5.3.7.9.1.lcl.ca.net
   IN NAPTR 100 10 “u” “E2U+sip” “!^.*$!sip:+19735553333@sip-srvr8.ca.net!”
```

Carrier-B Tier 2 DB:

```
$ORIGIN 2.2.2.2.5.5.5.3.7.9.1.e164enum.us
   IN NAPTR 100 10 “u” “E2U+sip” “!^.*$!sip:+19735552222@gw-x.cb.net!”
```

Carrier-B Internal Routing DB:

```
$ORIGIN 2.2.2.2.5.5.5.3.7.9.1.lcl.cb.net
   IN NAPTR 100 10 “u” “E2U+sip” “!^.*$!sip:+19735552222@sip-srvr1.cb.net!”
```

Table 1 – Illustrative Contents of Name Servers

3.3.2 Calls Between Federations

3.3.2.1 Federations within interleaved numbering resources

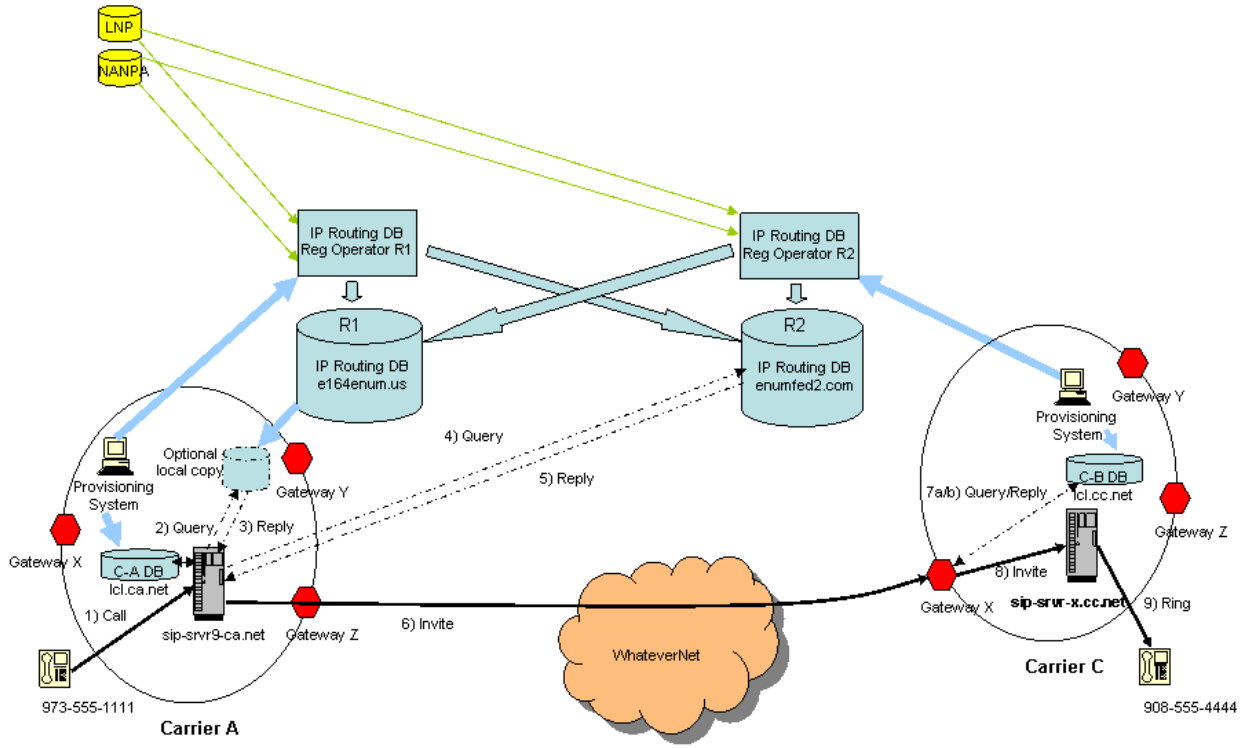

Figure 8 – Carrier A to Carrier C between Two Federations

IP Routing DB for Federation 2:

```
$ORIGIN enumfed2.com

   4.4.4.4.5.5.5.8.0.9.1
     IN NAPTR 100 10 "u" "E2U+sip" "!^.*$!sip:+19085554444@gw-x.cc.net!"
```

Carrier-C Internal Routing DB:

```
$ORIGIN 4.4.4.4.5.5.5.8.0.9.1.lcl.cc.net

   IN NAPTR 100 10 "u" "E2U+sip" "!^.*$!sip:+19085554444@sip-srvr-x.cc.net!"
```

Table 2 – Illustrative Contents of Second Federation Name Servers

Additional details of the illustrative call flow in Figure 8 follows:

1) Caller Dials 1-908-555-4444

[unnumbered]. Query 4.4.4.4.5.5.5.3.7.9.1.lcl.ca.net

[unnumbered]. Reply: NXDOMAIN

2) Query 4.4.4.4.5.5.5.3.7.9.1.e164enum.us (in either the CC1 ENUM LLC Registry or an optional Local Copy)

The first issue is how to connect the query to the local federation's domain (e164enum.us) to the domain for the second federation (enumfed2.com). Zone transfer mechanisms, while copying the contents from one registry to another; do not alter the domain of the records. In order to alter the domain of the records from the second registry in the first registry (and vice versa), the records need to go through a registration process. The second issue is whether to use a pointer

to the other registry (consistent with "Approach X" of the generic reference model) or whether to copy the contents of the record into the other registry (consistent with "Approach Y" of the generic reference model). If the contents are copied, then, if a URI changes, it must be maintained in two (or more) places; the use of pointers negates the need to maintain the contents in multiple places (additions and deletions, however, still cause activity in both registries). Copying the contents to the other registry also limits the ability to provide different responses or differential resolution based on the query originator, unless all providers implement their gateway URIs in separate Tier 2 name servers (moving "policy" decisions to the service provider and out of the Registry). Because the numbers in the two registries are interleaved (porting makes the interleaving more likely), the proposal of the CC1 ENUM LLC is to use a pointer via the CNAME record.

LLC IP Routing DB:

```
$ORIGIN e164enum.us
   4.4.4.4.5.5.5.8.0.9.1 IN CNAME 4.4.4.4.5.5.5.8.0.9.1.enumfed2.com
   1.1.1.1.5.5.5.3.7.9.1 IN NS t2.ca.net
   2.2.2.2.5.5.5.3.7.9.1 IN NS t2.cb.net
   3.3.3.3.5.5.5.3.7.9.1 IN NS t2.ca.net
```

Table 3 – Illustrative Contents of LLC Registry

3) Reply CNAME directs subsequent query to 4.4.4.4.5.5.5.8.0.9.1.enumfed2.com

4) Query 4.4.4.4.5.5.5.8.0.9.1.enumfed2.com

5) Reply w/ sip:+19085554444@gw-x-cc.net

6) Invite to sip:+19085554444@gw-x-cc-net

7a) Query 4.4.4.4.5.5.5.8.0.9.1.lcl.cc.net

7b) Reply w/ sip:+19085554444@sip-srvr-x.cc.net

8) Invite to sip:+19085554444@sip-srvr-x.cc.net

3.3.2.2 Federations with unique numbering resources

For links to federations in other countries (outside of the NANP), interconnection of registries would still involve the use of pointers. In this case, the link between registries can be made at the country code level. The pointer to be used in the LLC proposal is implemented in a DNAME record. It would cause queries to 9.8.7.6.5.4.3.2.1.4.4.e164enum.us to be directed to 9.8.7.6.5.4.3.2.1.4.4.infra-enum.co.uk. The same call flow as previously used above applies to this scenario.

LLC IP Routing DB:

```
$ORIGIN e164enum.us
   4.4.4.4.5.5.5.8.0.9.1 IN CNAME 4.4.4.4.5.5.5.8.0.9.1.enumfed2.com
   1.1.1.1.5.5.5.3.7.9.1 IN NS t2.ca.net
   2.2.2.2.5.5.5.3.7.9.1 IN NS t2.cb.net
   3.3.3.3.5.5.5.3.7.9.1 IN NS t2.ca.net
   4.4 IN DNAME infra-enum.co.uk
```

Table 4 – Illustrative Contents of LLC Registry

3.4 CUTR Use Cases

For the CUTR Reference Model Use Cases, each VoIP provider provisions their TNs, either via their chosen registry operator or directly, into the centralized upper tier registry. For the following Use Cases, this centralized upper tier registry only contains pointers to the registries or carrier-specific databases to be queried in order to discover the necessary routing information (i.e., ingress interconnect point) to route a call to a carrier's IP endpoints. For these specific Use Cases, this centralized upper tier registry does not, but could, contain ingress interconnect points associated with the TNs contained within it.

3.4.1 CUTR-Option 1

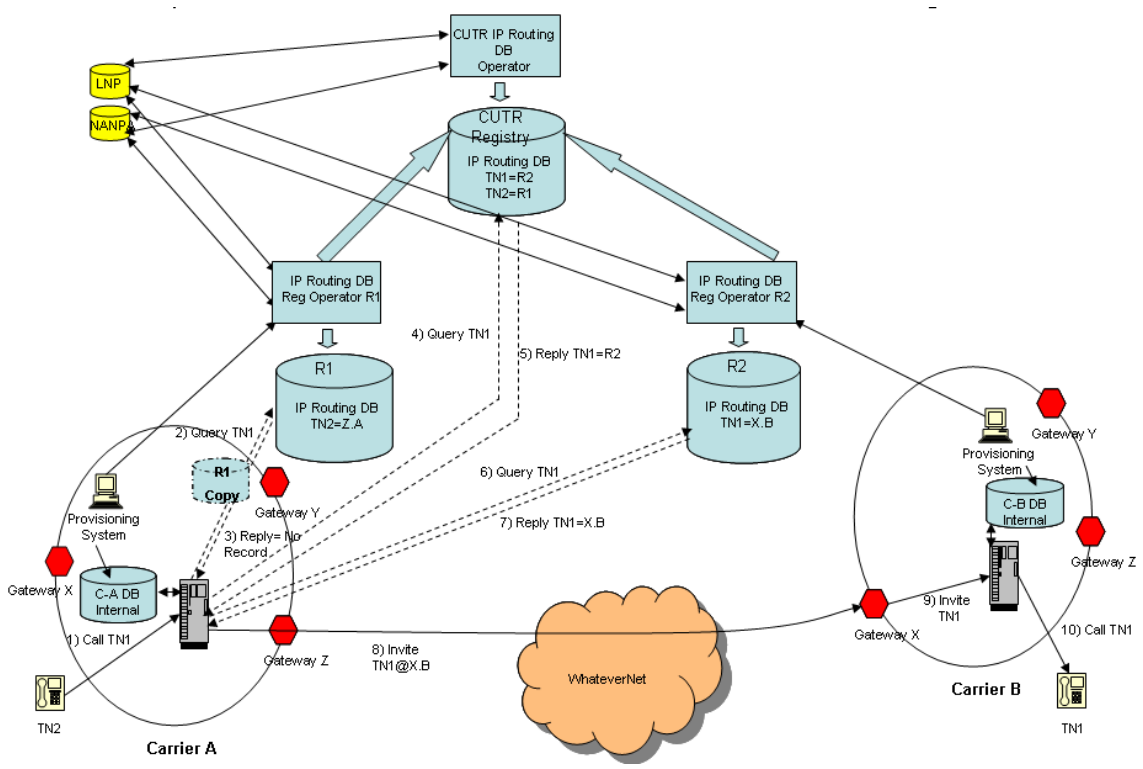

Figure 9 – Centralized Upper Tier Registry (CUTR)
(Carrier A and B Subscribe to Different Registries)

Figure 9 depicts a scenario where the originating and terminating carriers subscribe to two different registries, R1 and R2, respectively.

> NOTE: These Use Cases assume that the first query that the originating carrier (Carrier A in these figures) makes is to its own internal database to determine if the called number is one served by that carrier. The sequence of subsequent queries is then determined by the carrier. For example, after querying its own internal database and determining the called number is not one of its own, Carrier A could next query the registry to which it is subscribed (R1), or could query the CUTR following the query to its own internal database.

1) When TN2 initiates a call to TN1, Carrier A first determines through its own local database C-A DB-Internal that TN1 belongs not to it, and therefore to another carrier.
2) Carrier A next queries either R1 Copy (if deployed) or R1 Registry. Note that R1 Copy, if deployed, may not be a complete copy of the R1 Registry, but may likely be a subset of R1 Registry containing TNs of R1 Registry carrier customers that have an IP interconnection relationship with Carrier A.
3) Since Carrier B does not subscribe to the same registry as Carrier A, no record of TN1 will be contained in R1 Copy or R1 Registry.
4) Carrier A next queries the CUTR.
5) The CUTR returns a pointer to R2 Registry indicating that R2 is the authoritative database to be queried for discovery of a URI for TN1 which indicates the serving carrier and its particular ingress gateway to which the call should be sent.
6) Carrier A next queries R2 Registry.
7) R2 Registry returns a URI indicating that the ingress interconnect point for TN1 is Gateway X of Carrier B.
8) Carrier A next offers the call to Carrier B, illustrated by the SIP INVITE with URI TN1@X.B in the figure.
9) Once Carrier B receives the call, it uses its own local database C-B DB-Internal to determine that TN1 belongs to it and to obtain final routing information to TN1.
10) The call is delivered to TN1.

3.4.2 CUTR- Option 2

Figure 10 depicts a scenario where the originating carrier (Carrier A) subscribes to a registry (R1), but the terminating carrier (Carrier B) deploys its own database.

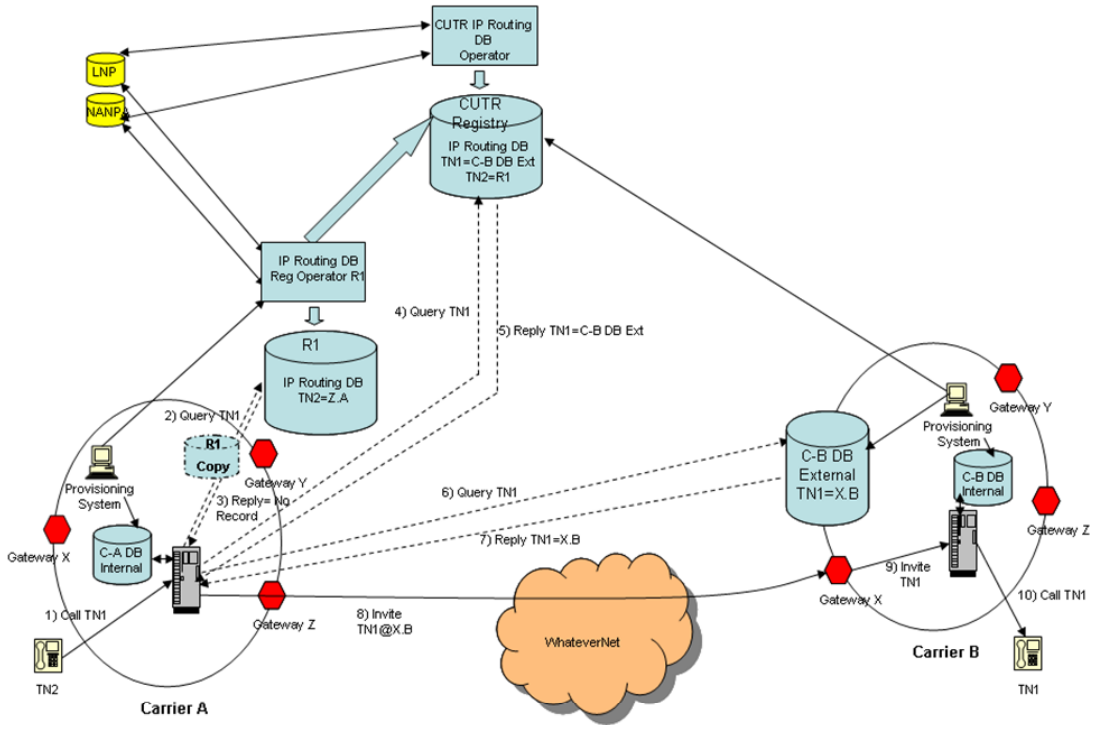

Figure 10 –CUTR (Carrier A Subscribes to a Registry, Carrier B Deploys Its Own Database)

NOTE: These Use Cases assume that the first query that the originating carrier (Carrier A in these figures) makes is to its own internal database to determine if the called number is one served by that carrier. The sequence of subsequent queries is then determined by the carrier. For example, after querying its own internal database and determining the called number is not one of its own, Carrier A could next query the registry to which it is subscribed (R1), or could query the CUTR following the query to its own internal database.

1) When TN2 initiates a call to TN1, Carrier A first determines through its own local database C-A DB-Internal that TN1 belongs not to it, and therefore to another carrier.
2) Carrier A next queries either R1 Copy (if deployed) or R1 Registry. Note that R1 Copy, if deployed, may not be a complete copy of the R1 Registry, but may likely be a subset of R1 Registry containing TNs of R1 Registry carrier customers that have a peering relationship with Carrier A.
3) Since Carrier B does not subscribe to the same registry as Carrier A, no record of TN1 will be contained in R1 Copy or R1 Registry.
4) Carrier A next queries the CUTR.
5) The CUTR returns a pointer to Carrier B's locally deployed IP routing database (C-B DB External) indicating that C-B DB External is the authoritative database to be queried for discovery of a URI for TN1 which indicates the serving carrier and its particular ingress gateway to which the call should be sent.
6) Carrier A next queries Carrier B's C-B DB External database.

7) Carrier B's C-B Db External database returns a URI indicating that the ingress interconnect point for TN1 is Gateway X of Carrier B.
8) Carrier A next offers the call to Carrier B, illustrated by the SIP INVITE with URI TN1@X.B in the figure.
9) Once Carrier B receives the call, it uses its own local database C-B DB-Internal to determine that TN1 belongs to it and to obtain final routing information to TN1.
10) The call is delivered to TN1.

3.4.3 CUTR- Option 3

Figure 11 depicts a scenario where the originating and terminating carriers subscribe to two different registries, R1 and R2, respectively, and the terminating carrier deploys and maintains its own IP routing database to be queried externally.

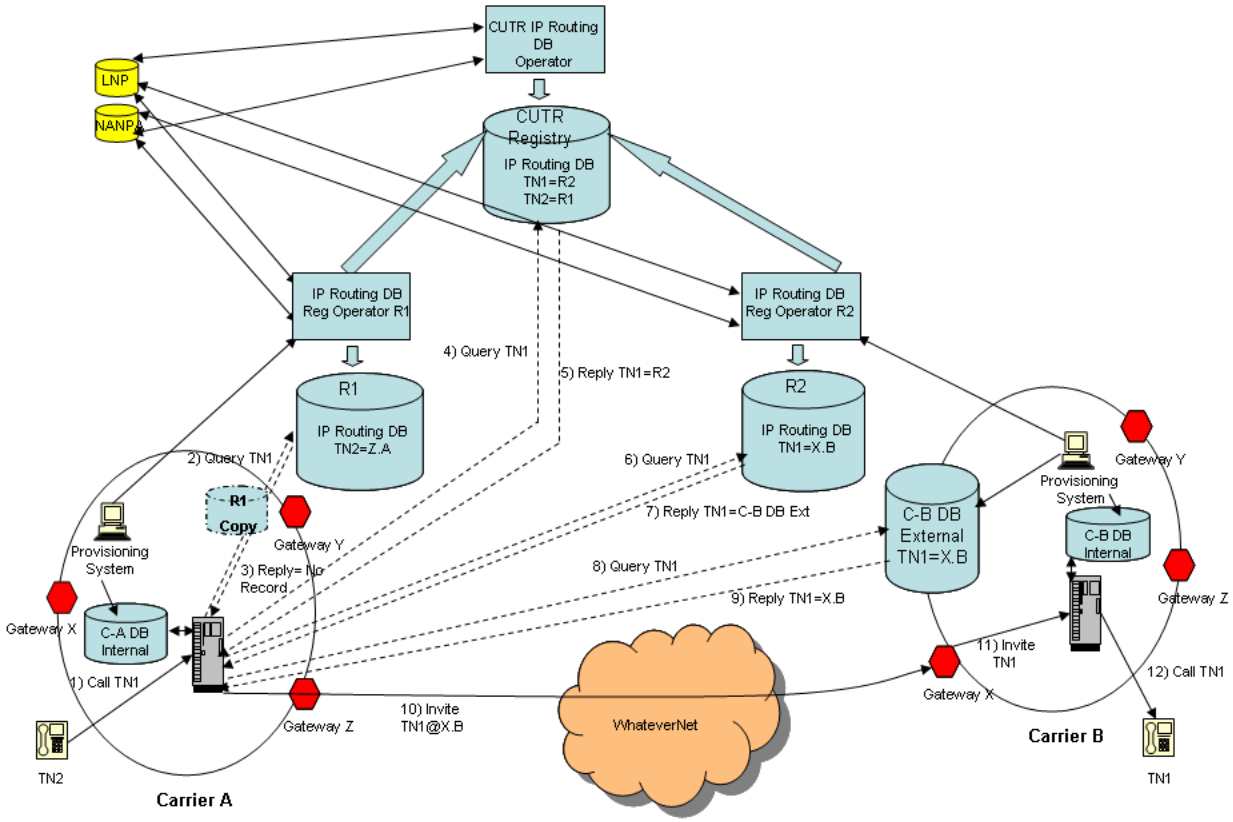

Figure 11 –CUTR (Carrier A and Carrier B Subscribe to Different Registries, Carrier B's Registry is Provisioned with Pointer to Carrier B External DB

NOTE: These Use Cases assume that the first query that the originating carrier (Carrier A in these figures) makes is to its own internal database to determine if the called number is one served by that carrier. The sequence of subsequent queries is then determined by the carrier. For example, after querying its own internal database and determining the called number is not one of its own, Carrier A could next query the registry to which it is

subscribed (R1), or could query the CUTR following the query to its own internal database.

1) When TN2 initiates a call to TN1, Carrier A first determines through its own local database C-A DB-Internal that TN1 belongs not to it, and therefore to another carrier.
2) Carrier A next queries either R1 Copy (if deployed) or R1 Registry. Note that R1 Copy, if deployed, may not be a complete copy of the R1 Registry, but may likely be a subset of R1 Registry containing TNs of R1 Registry carrier customers that have a peering relationship with Carrier A.
3) Since Carrier B does not subscribe to the same registry as Carrier A, no record of TN1 will be contained in R1 Copy or R1 Registry.
4) Carrier A next queries the upper tier CUTR.
5) The CUTR returns a pointer to R2 Registry, to which Carrier B is subscribed.
6) Carrier A next queries R2 Registry.
7) R2 Registry returns a pointer to Carrier B's locally deployed IP routing database (C-B DB External) indicating that C-B DB External is the authoritative database to be queried for discovery of a URI for TN1 which indicates the serving carrier and its particular ingress gateway to which the call should be sent.
8) Carrier A next queries Carrier B's C-B DB External database.
9) Carrier B's C-B Db External database returns a URI indicating that the ingress interconnect point for TN1 is Gateway X of Carrier B.
10) Carrier A next offers the call to Carrier B, illustrated by the SIP INVITE with URI TN1@X.B in the figure.
11) Once Carrier B receives the call, it uses its own local database C-B DB-Internal to determine that TN1 belongs to it and to obtain final routing information to TN1.
12) The call is delivered to TN1.

4 TRANSIT NETWORKS

Prior models discussed in this document assume the carriers and registries may have Layer 3 connectivity represented by Whatever.net. The carrier originating the call and the carrier terminating it could communicate signaling and RTP through a ubiquitous Layer 3 infrastructure. This section discusses a model where it is assumed that transit networks comprise a Layer 5 or session and policy aware VoIP infrastructure containing functionality beyond Layer 3 connectivity. A gateway function that stands at the peering border of a transit carrier provides access to the carrier's VoIP network and may provide differentiated services for VoIP. Refer to the gateway functionality as described earlier in the document.

This transit network model is presented in Figure 12. In this model, Carrier-A (CA) and Carrier-B (CB) that originate and terminate a call may have VoIP peering relationships with transit carriers Carrier X and Carrier Y respectively. That peering relationship defines methods

that differentiate, secure, and bill VoIP differently from other internet traffic the two carriers may share. Gateways are labeled with GW, followed by the Carrier A, B, X, or Y, and the instance of the gateway in that carrier's network. For example, GW-X1 is Gateway 1 in Carrier X's network.

In this figure it is assumed that CA and Carrier X subscribe to the services of Registry 1 (R1), and CB and Carrier Y subscribe to the services of Registry 2 (R2). In other words, Carrier X is federated with CA through shared R1 and Carrier Y is federated with CB using shared R2. This model should not preclude a carrier operating a registry that is internal to the carrier.

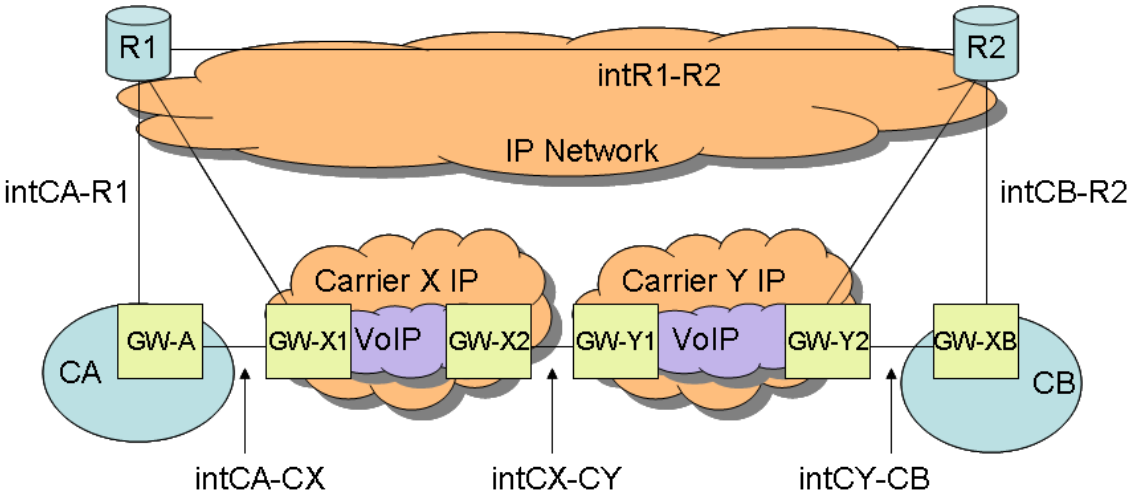

Figure 12 -Intermediate Carrier Model

The interfaces between CA and R1 (intCA-R1) and CB and R2 (intCB-R2) allow the carriers to query the registries they are federated with. Carrier's X and Y may also query the federation they subscribe to. That interface is shown in the figure between the GW and Registry though it is not labeled. The interface between the registries R1 and R2 (intR1-R2) is also a query interface that allows the registries in different federations to query the registry in another federation. Though not shown, Carriers X and Y may also belong to a common federation with a registry that they may query for routing information.

The interfaces are analogous to the interfaces already described in earlier models, though their functionality in the transit carrier model may pose additional requirements. This discussion also assumes that all carriers have access to the registries they are federated with using a Layer 3 network as represented by the IP network at the top. The security policies associated with registry queries is determined by the bilateral agreements between the carriers and their registry, and between the registries.

The interfaces between the carriers and transit carriers represented by intCA-CX, intCX-CY, and intCY-CB are assumed to be signaling interfaces carrying SIP messages.

5 ASSESSMENT OF INTERCONNECT AREAS

All actions from the assessment of the above models and further areas affecting interconnection are consolidated in this section with the understanding that the committees/forums and interested parties that are mentioned in the action items will determine the timeframe for associated deliverables.

5.1 Signaling and Media Transport

The reference architecture presented in this work plan focuses on the signaling aspects of IVCR, both database queries and sending the call from one carrier to another. This assessment considers the relationship between the SIP signaling path and the media path for the call between carriers. Ultimately, it is assumed that the degree of coupling of the signaling and media paths is left to pair-wise carrier business agreements.

5.1.1 Assessment

5.1.1.1 Carrier A – Carrier B Direct Connection

In theory, the media path of the call (or media paths, because there could be a separate path for each direction), could be completely decoupled from the signaling path, because the SDP offer/answer in SIP signaling allows each carrier SIP gateway to indicate an IP receive address where that carrier wants to receive media packets for the call, and those IP addresses need not have any relationship with the SIP signaling gateways.

That decoupling of signaling and media paths is problematic in the managed network/service Carrier environment. In that environment, there is a linkage between transport and signaling/service layers to support service aspects such as:

- QoS
- resource/admission control
- service-related capabilities such as in-band monitoring of the media stream (e.g., for DTMF)
- more straightforward or thorough service assurance capabilities

Therefore, in practice, the gateways/border elements for the SIP call setup signaling would also serve as gateways for the call media (i.e., the gateway function spans both aspects of the call.)

Moreover, in the case where Carriers are utilizing VPNs to interconnect for VoIP, one would typically expect to see the SIP signaling and media path on the same Virtual Private Network (VPN) in order to facilitate operations support.

5.1.1.2 Roaming

Roaming refers to the situation where a customer is connected to a "Visited" network instead of his/her "Home" service provider network. While roaming is generally thought of as a wireless

scenario, it applies to wireline as well. For example, a person can move his/her VoIP Terminal Adaptor to another Digital Subscriber Line (DSL) on another network.
Without loss of generality, suppose a caller calls the roamer.[4] There is incentive to have the media path go from the caller's network directly to the roamer's visited network, rather than via the roamer's home network, in order to minimize packet delay and minimize the use of resources.

The issue of allowing the media path to go directly from the caller's network to the visited network is being considered for wireless by the 3rd Generation Partnership Project (3GPP) as part of Internet Protocol Multimedia Subsystem (IMS) Release 8. There the topic is referred to as "local breakout". Local breakout faces obstacles similar to those mentioned above.

Note that that 3GPP activity still assumes the signaling path goes through the home network, in order for the home network to provide services/features control.

5.1.2 Action

ATIS PTSC-SAC and WTSC should monitor and participate as appropriate in the 3GPP local breakout work. A common wireline/wireless solution should be the goal, especially given the desire to move to a converged services environment.

5.2 Security

5.2.1 Assessment

Security, including an over-arching framework, is being addressed in separately and collectively the PTSC Security Subcommittee (PTSC-SEC), PTSC-SAC, PRQC, and the Telecom Management and Operations Committee (TMOC). Security features must be provided in the ENUM DB access area, for both provisioning and query interfaces. In addition, security is required for the network-network call signaling and media, including the case where an intermediate network is used for transport (Whatever.net). It is expected that security methods/measures already documented in ATIS committees can be employed to meet IVCR needs.

5.2.2 Action

Continuing work on security in PTSC-SEC, PTSC-SAC, PRQC, and TMOC should include specific consideration of IVCR security matters and solution sets.

[4] It could be instead that the roamer is the calling party, or it could be that both the calling and called parties are roamers, but the point is the same.

5.3 Public Safety

5.3.1 E9-1-1

5.3.1.1 Assessment

In the area of E9-1-1, significant standards work has been completed or is underway. Specifically:

- The ATIS ESIF, which includes the NENA, is working to coordinate standards development efforts addressing E9-1-1 in the context of Next Generation Network (NGN)/IMS. ESIF's Next Generation Emergency Services (NGES) committee is heading this effort.
- The IETF has formed the Emergency Context Resolution with Internet Technologies (ECRIT) Working Group. The group is addressing the association of the physical location of the end user with the appropriate emergency services center, such as E9-1-1 PSAPs, in call routing.
- The IETF has also formed the, Geographic Location/Privacy (geopriv) Working Group. This Working Group is addressing the security and privacy implications and requirements related to the transfer of geographic location information to location-based applications, such as E9-1-1 PSAPs.

For more details regarding E9-1-1 related activities see Appendix A.

5.3.1.2 Action

As network oriented standards development work and deployments continue in the area of IVCR, related E9-1-1 standards issues may be identified and specific requirements may become better understood. Specifically, since 9-1-1 calls are routed based upon location and not destination address, the identification of these clarified issues would be a true test of "needs" for IVCR related E9-1-1 standards. The existing work on E9-1-1 in ESIF, PTSC, NENA, and IETF should continue. ESIF should review this IVCR document for impacts and issues. As these issues are identified, notification should be provided to appropriate ATIS committees.

5.3.2 Lawfully Authorized Electronic Surveillance (LAES)

5.3.2.1 Assessment

Standards development committees addressing the Communications Assistance for Law Enforcement Act (CALEA) and Lawfully Authorized Electronic Surveillance (LAES) or Lawful Intercept (LI) have been making steady progress, particularly in the areas of LAES/LI for wireline/wireless voice, wireline/wireless data, push-to-talk, VoIP, and internet access and services. For more details regarding LAES/LI related activities see Appendix. A.

5.3.2.2 Action

CALEA/LAES in packet-based networks is being adequately addressed in the ATIS PTSC-LAES Subcommittee and WTSC-LI Subcommittee. No additional action is recommended at this time.

5.4 Emergency Services

5.4.1 Assessment

Several organizations are working to create standards in the area of emergency services, including: ATIS, IETF, International Telecommunication Union (ITU) and the National Communications System (NCS) of the Department of Homeland Security (DHS). Some of their efforts are as follows:

- Within the ATIS committees, the PRQC and PTSC have engaged the lead on Government Emergency Telecommunications Service/Emergency Telecommunications Service (GETS/ETS) and WTSC has supported the need for work on the GETS/ETS wireless aspects. Network Interconnection Interoperability Forum (NIIF) work includes development of "Initial Address Message (IAM) Priority Test for Interconnects" test scripts to verify the proper Integrated Services User Part (ISUP) IAM Message Transfer Part (MTP) priority setting for interconnection of Plain Old Telephone Service (POTS), GETS, and Wireless Priority Service (WPS) calls, agreements related to National Security/ Emergency Preparedness (NS/EP) call difficulties when some portion of the call is served by VoIP technology, which includes examination of trunking arrangement issues between VoIP and Local Exchange Carrier/Interexchange Carrier (LEC/IXC), and routing procedural problems unique to the NS/EP NPA.
- The IETF's Internet Emergency Preparedness (ieprep) Working Group has produced a number of Informational RFCs.
- The IITU-T's Study Group 11 has developed signaling requirements to support the International Emergency Preference Scheme (IEPS) and ETS. They have also produced Q.Sup 53, *Signaling support for International Emergency Preferential Scheme (IEPS)*. In addition, the Work Program also includes *Signaling Requirements to Support the Telecommunication for Disaster Relief (TDR) in IP Networks*.
- The NCS has issued a Request For Information (RFI) seeking technical information regarding assured communications for voice and data over the Internet.

For more details regarding Emergency Services activities see Appendix. A.

5.4.2 Action

Existing work on NS/EP, GETS, and ETS in the industry should continue. PRQC, PTSC and NIIF should review this IVCR document for impacts and issues.

5.5 Provisioning

5.5.1 Assessment

There is an industry need to identify a standard or common mechanism for provisioning telephone numbers into registries. The IETF has defined a standard that can be used for

registry database provisioning: the Extensible Provisioning Protocol (EPP), described in RFCs 3730 – 3734, and ENUM specific extensions described in RFC 4114. This document describes an E.164 number provisioning interface to an ENUM registry, specified using Extensible Markup Language (XML), for version 1.0 of EPP. The CC1 ENUM LLC intends to use this specification as part of the implementation described in Section 3.3 above.

Due especially to the lack of sufficient industry experience with a near term ENUM implementation, most operational support systems today haven't yet needed to support EPP. In addition, most service providers would prefer to run EPP over Simple Object Access Protocol (SOAP) as opposed to directly over the transport protocols specified in the EPP RFCs.

A significant number of industry participants have an existing base of software development built around SOAP/XML and WSDLs that is being used for registry database provisioning. These participants include provisioning system companies and existing registries.

Currently there is an effort underway in the IETF to establish a standard for provisioning IP data into an ENUM registry. In December 2007 an IETF PEPPERMINT Birds Of a Feather (BOF) was held to determine the next steps for moving this standard forward. The conclusion of the BOF was general consensus that there is a problem in this space, and that it would be appropriate for IETF to work on this topic. It was agreed that a second BOF will be held at IETF 71 to consider the details of a suitable charter for this group. Given the parallel nature of this initiative, close coverage is recommended.

5.5.2 Action

The TMOC in cooperation with Operation and Billing Forum (OBF) and PTSC should develop a Technical Report to define the overall provisioning process. An investigation into the need for an ATIS standard regarding a standard way to provision telephone numbers should be conducted and appropriate standards development actions taken. ATIS TMOC should monitor the progress of the IETF PEPPERMINT work on provisioning IP data into an ENUM registry.

5.6 Billing/Settlements

Billing and Settlement issues have been addressed in the context of Operation Support System (OSS) Interconnection. Please see Section 5.7 below.

5.7 Operation Support System (OSS) Interconnection

5.7.1 Assessment

This section contains the *foundation standards* that are under the category of "OSS Interconnection." Note that some level of IVCR specific work enhancements would be needed for these standards in order to make them "IVCR (VoIP Interconnection) specific." The

fundamental issue here is that OSS Interconnection requirements in support of VoIP Interconnection are not well understood (see general gap below).

General Gap for OSS Interconnection: OSS Interconnection requirements in support of VoIP Interconnection are not well understood. Even though there is a good foundation of OSS Interconnection standards from TMOC, OBF, TeleManagement Forum (TMF) and ITU-T – IVCR OSS requirements are still needed. Having a well understood set of OSS Interconnection requirements in support of VoIP Interconnection would drive IVCR OSS Interconnection standards work to provide for efficient VoIP Interconnections operations support in practice. The term "OSS Interconnection" refers to the entire suite of functions and interfaces (i.e., Billing/Settlements, Service Assurance, Trouble Administration, etc.).

Specific Gap (for Traffic/Network Management): For circuit-switched call routing, inter-carrier agreements have been made for handling network management under overload and/or disaster conditions (see ATIS/TMOC ANS TI.202). In the case of VoIP call routing, similar types of inter-carrier agreements also need to be defined with respect to network management.

While some abnormal network traffic conditions may be handled directly by the inter-carrier network routing protocols themselves, others are likely to require inter-carrier OSS Interconnection capabilities such as those defined in M.3341, as well as others that have yet to be defined. Requirements would need to be developed in this area before significant standards work can be initiated. TMOC has an open Issue (Issue 103) related to this, but industry support is needed.

OSS Interconnection Standards and current work applicable to or in general support for IVCR (VoIP Interconnection):

- Provisioning: See Provisioning section in this document.
- Service Assurance (e.g., Fault Mgt, Performance Mgt):
    - ITU-T, M.3340, B2B/C2B Interface Framework for NGN Service Assurance Management
    - ITU-T M.3341, Requirements for QoS/Service Level Agreement (SLA) management over the Telecommunications Management Network (TMN) X-interface for IP-based services
- Trouble Administration
    - M.3334, Requirements and analysis for NGN trouble administration across B2B and C2B interface [covers requirements and analysis, Unified Modeling Language (UML)]
    - ATIS-0300003.2005, TMOC, XML Schema Interface for Fault Management (Trouble Administration) (Formerly known as T1.278-200X)
- Accounting Management (Billing/Settlements):
    - See Billing/Settlements section in this document
    - TMOC Issue 57: VoIP Accounting Management Network Element (NE)/OSS Interface – ANS

  - TMOC Issue 81: Inter-Administration Accounting Management
  - TMOC Issue 100: NGN Accounting Management NE/OSS Interface - ITU-T
  - ATIS-0300075, TMOC, Usage Data Management for Packet-Based Services Service-Neutral Architecture and Protocol Requirements
  - ATIS-0300075.1.2006, TMOC, Usage Data Management for Packet-Based Services – Service-Neutral Protocol Specification for Billing Applications
- OSS Interconnection – General ITU-T Recs:
  - ITU-T Recommandation M.3400, TMN Management Functions
  - ITU-T Recommendation M.3060, Principles for the Management of Next Generation Networks
  - ITU-T Recommendation M.3050.0, Enhanced Telecom Operations Map (eTOM) – Introduction
  - ITU-T Recommendation M.3050.1, Enhanced Telecom Operations Map (eTOM) – The business process framework
  - ITU-T Recommendation M.3050.2, Enhanced Telecom Operations Map® (eTOM) – Process decompositions and descriptions
  - ITU-T Recommendation M.3050.3, Enhanced Telecom Operations Map® (eTOM) – Representative process flows
  - ITU-T Recommendation M.3050.4, Enhanced Telecom Operations Map (eTOM) – B2B integration: Using B2B inter-enterprise integration with the eTOM
  - ITU-T Recommendation M.3050.sup2, Enhanced Telecom Operations Map (eTOM) –Supplement 2: Public B2B Business Operations Map (BOM)

5.7.2 Action

Existing work on OSS Interconnection (related to NGN, VoIP, and IVCR) in TMOC, OBF, TMF and ITU-T should continue. TMOC and OBF should review this IVCR document for impacts and issues. In addition, as network oriented standards development work and deployments continue in the area of IVCR, related OSS Interconnection standards issues may be identified and specific requirements may become better understood. The identification of these clarified issues would be a true test of "needs" for IVCR related OSS Interconnection standards. As these issues are identified, notification should be provided to TMOC for further action and industry coordination.

5.8 ENUM-Related Assessment

5.8.1 ENUM Characteristics

There are two major characteristics that differentiate the types of ENUM implementation; Public versus Private, and End User versus Service Provider. The focus of this assessment and work

plan is on Private ENUM for Service Providers. Provided below is a description of ENUM implementation.

5.8.1.1 Public ENUM

Public ENUM is defined by being implemented in a recognized global domain. The domain may be available on the public Internet and various regulatory, industry, and standards bodies moderate the domain's policies and practices, particularly where countries may choose to participate in the global domain.

5.8.1.2 Private ENUM

Private ENUM is defined by being implemented by individual companies or groups of companies in a domain that is not agreed to or recognized outside the implementing companies. Private ENUM is used when there is a closed user group that wants to use ENUM to exchange IP traffic. An example of such a user group is a group of communications carriers that want to exchange VoIP traffic. The user group that creates and uses the domain will also create the policies for the domain. Historically, regulatory as well as industry and standards bodies have not set or moderated policies and practices in private ENUM implementations.

5.8.1.3 End User ENUM

The end user is the registrant for the ENUM domain name and can provision their records in the ENUM registry. End user ENUM requires that the end user has "opted in" to the ENUM service and the Registrar must validate that the registrant is the number assignee. The URIs described in the NAPTR records define communication end-point applications.

5.8.1.4 Infrastructure ENUM (aka Carrier ENUM or Service Provider ENUM)

The carrier is the registrant of the ENUM domain name and can provision records in the ENUM registry. Some function in the provisioning system must validate that the registrant has been allocated the number by the national regulatory authority (e.g., NANPA) or that the number has been ported to that service provider in a recognized manner. Carriers map TNs to network points of interconnection to enable call routing and features.

5.8.1.5 Differentiation between Public End User ENUM and Private Service Provider ENUM

The characteristics that differentiate Public End User ENUM and Private Service Provider ENUM are listed below.

Public End User ENUM

- End User Focus.
- Uses the "e164.arpa" top domain level.
- Country Code delegation administered by Governments/ITU.
- Data populated by end users who choose to opt-in.
- Capability of End Users to manage their own telephone number information.
- May contain "personal" data if the user desires. There are privacy concerns but placing this data in ENUM is according to user choice.
- Data may be out of date or even inaccurate because it is up to the end user to enter it and keep it updated.

- Not all telephone numbers may be in registry.

Private Service Provider ENUM

- Closed group with private focus.
- Not reachable by end users or Internet users.
- Administrative polices for the use of the domain are established by the group.
- Service Providers provision records not the End Users.
- It is generally expected that access to record information will be controlled, with access limited to "trusted" parties.
- Does not contain "personal" data, only data required for call and service routing.
- Use routing information to discover and exchange IP traffic.

5.8.2 Address of Record/Interconnect Points

5.8.2.1 Assessment

Two distinct roles for ENUM in the context of IMS have been identified. Although there are some differences in the use of ENUM in SoftSwitch architectures, the basic principles still apply. As was stated previously, this applies to IVCR reference models as well.

The two roles for ENUM are:

1. identify the SIP Address of Record (AoR) of users (e.g. within the IMS domain); or
2. identify the interconnect point for users in other IMS (or VoIP) domains.

Although standards groups have not yet fully agreed upon an appropriate format to indicate an interconnect point in ENUM, it appears unlikely that it will be exactly the same as the AoR for the user. However it does appear likely that the allowed format for an AoR and for an interconnect point will be similar. Unfortunately, even though the ENUM format of an AoR and an interconnect point will not be the same, it will not generally be possible to unambiguously determine if a given record is an AoR or an interconnect point, simply by examining the ENUM record. However, the appropriate processing will be different if the result is an AoR (e.g., query the Home Subscriber Server (HSS)) than it will be if it is an interconnect point (route to the network edge).

One possible way to differentiate between an AoR and an interconnect point would be to store the information in different ENUM databases, or in a different portion of the ENUM tree. This is the approach that IETF is implicitly taking in the ENUM WG. User ENUM (AoR) is under e164.arpa, while Infrastructure ENUM (interconnect point) is under c.e164.arpa (or something similar). With this approach, an ENUM query for an AoR is different than an ENUM query for an interconnect point. Therefore it is possible to determine a priori whether an ENUM query will return an AoR or an interconnect point. This approach requires that carriers separate their AoR and interconnect data in ENUM. It also requires two separate ENUM dips, rather than a single combined AoR/Infrastructure ENUM dip. This will have operational and performance

implications. It is believed that this will not be acceptable to all carriers and that some carriers will insist on combining AoR and interconnect data into a single ENUM repository, accessible with a single ENUM query.

If it is not acceptable to use multiple ENUM queries as a mechanism to differentiate between an AoR and an interconnect point, then an alternate mechanism is needed to differentiate between them, without any other context. This is a standards gap, and should be identified as such. Until the new ENUM "Interconnect_point" is standardized, it is required that Infrastructure ENUM must be in a separate database that only contains interconnect data.

5.8.3 Naming Convention

It is recommended that for the time being, ATIS should only consider end user addressing based on E.164 numbers (explicit, or implicit – e.g. e164@carrierA.net) so that an ENUM lookup can be performed to initiate the process. This approach also allows the fallback mechanism for interconnect to be the PSTN (Time Division Multiplex (TDM)). The issue of how we would deal with addressing that is not based on E.164 numbers should be deferred to a later date, because there is no compelling near term business driver, and because it will be much easier to work on the issue once we have a broad base of working IVCR deployed.

5.8.4 Action

5.8.4.1 End User and Carrier ENUM

There is no action related to End User and Carrier ENUM. See Appendix C for information concerning the industry's progress regarding Carrier ENUM following the actions noted in the previous ATIS VoIP Workplan. ATIS PTSC should continue to monitor the ENUM LLC and SPEERMINT.

5.8.4.2 AoR and Interconnect Points (ENUM Service Types)

Ultimately it is recommended that the IETF standardize a new ENUM service type that corresponds to an interconnect point. This should include the requirement for a mechanism to unambiguously differentiate between an ENUM response containing: an AoR URI, an interconnect point URI, or a registry URI. It is recommended that the ATIS PTSC work with IETF to standardize a new ENUM service type that corresponds to an interconnect point. PTSC and its members should be encouraged to correspond with and/or participate in the IETF to this end. Also, contributions to this end could be made within the ENUM LLC.

5.8.4.3 Naming Convention

Provided that in the short term, ATIS and its members only consider end user addressing based on E.164 numbers, there is no action related to naming conventions at this time.

5.9 Alternatives to ENUM

5.9.1 Assessment

The IVCR has identified how (private) ENUM can be used to identify the target AoR for a user, and how I-ENUM can be used to identify IP interconnect points. However, it should be remembered that ENUM is in a sense little more than a database format, and there are other technologies that could provide similar functionality. Some of these alternatives can be based on existing PSTN functionality, and can leverage the existing provisioning and data fill processes in the operator's network. Existing technology such as IN and Transaction Capabilities Application Part (TCAP) may be involved, and might provide useful transitional capabilities. It seems unlikely that these alternative solutions would be widely adopted, so it is not clear there is any value in documenting them further. However if these technologies were deployed within individual carrier networks they could still support full VoIP interconnection. Therefore nothing in this report should preclude their deployment in the near term where practical.

5.9.2 Action

There is no specific action required at this time.

5.10 Multi-media Services

5.10.1 Assessment

The focus of the IVCR has been VoIP. However, services beyond voice are important to the future of this industry. Services considered should include, but not be limited to:

- Instant Messaging
- Short Message Service (SMS)
- Internet Protocol Television (IPTV)
- Video
- Email
- MMS
- Push to Talk

A full consideration of multi-media services, must address issues such as:

- Addressing scheme: In the near term, it appears extremely likely that voice services, including IMS based voice, will be restricted to E.164 numbers. Current proposals for SIP addresses are typically based on an E.164 number (e164@carrierx.com), and the E.164 number can be extracted to perform an ENUM query. Given the desirability of

retaining the ability for legacy PSTN users to reach SIP users, this restriction is likely to persist indefinitely. If a user has an E.164 number, it is relatively straightforward to also use the E.164 number as a naming convention for multimedia services. If this approach is taken, multimedia addressing schemes can be accessed via ENUM and I-ENUM for multimedia services, at least in the near term.

- There is also a requirement for a generic interconnect scheme to provide connectivity as well as QoS for a range of services with (potentially) widely divergent requirements? For narrowband services such as IM and SMS, this is unlikely to be an issue, and the same mechanisms that are used for voice (largely over provisioning) will continue to apply. High bandwidth services such as good/high quality video represent more of a challenge, but QoS is being explicitly addressed by the IPTV Interoperability Forum (IIF).

In the near term multimedia addressing schemes predominately use E.164 numbers for naming. This allows the use of ENUM for address resolution.

5.10.2 Action

The PTSC should investigate the need for standards to address where other applications (e.g. instant messaging, video/high bandwidth) may have different requirements than VoIP in coordination with IIF.

5.11 Quality of Service (QoS)

5.11.1 Assessment

Mechanisms are available today to ensure QoS across an interconnect interface, including over-provisioning and call admission control based on counting the number of admitted media flows. (Call admission control can be implemented in session control devices (e.g., Call Session Control Functions (CSCF) or Soft Switch), or in Session–Border Control elements.) These mechanisms do not require additional standardization effort.

To enable dynamic QoS negotiation and efficient use of resources across interconnects, advanced, standards-based mechanisms (for requesting bandwidth, policy-based resource control, measuring available capacity, etc.) are needed. Efforts to develop such mechanisms are under way in a number of organizations, including ATIS PRQC and PTSC, European Telecommunications Standards Institute (ETSI) Telecoms & Internet converged Services & Protocols for Advanced Networks (TISPAN), IETF, and ITU-T. ATIS PTSC and PRQC, in particular, have also been coordinating the related US company contributions to the ITU-T.

5.11.2 Action

Existing work on QoS in the industry should continue. QoS can be dealt with in the short term by transport provisioning. In the longer term, mechanisms for dynamic QoS negotiation across an interconnect interface should be developed. While carrying out their efforts, the PRQC and

PTSC should monitor and coordinate the development of related efforts in other organizations such as the IETF, ETSI TISPAN and ITU-T. The NIIF should review this section for possible impacts to and areas needing coordination with their work.

In addition, efforts to develop call routing guidelines or criteria for carriers to ensure end-to-end QoS is desirable. The PRQC should include this work in their existing efforts.

5.12 Exchange of Data Across Registries

5.12.1 Assessment

Different approaches exist to the routing data content that is exchanged for registry interworking. Section 3 "Alternative Implementation Approaches" identifies potential different implementation scenarios for Inter-Carrier VoIP Call Routing registry interworking: Registry Interworking Using Exchange of Pointers; Registry Interworking Using Exchange of TN, URI Records; and IP Routing Database Call Setup CC1 ENUM LLC.

5.12.1.1 Registry Interworking Using Exchange of Pointers (Approach X)

Registry Interworking Using Exchange of Pointers is a form of registry interworking whereby a registry R1 can import TN pointers from a registry R2. Registry R2 may or may not be an ENUM LLC CC1 Registry. There is a need to clarify the meaning of the routing data received from R1 by a Carrier A. For a given TN, depending on whether R1 has the URI of an ingress point for a terminating network or a URI to be used to query R2, there needs to be some indication of the meaning of the URI so as to remove ambiguity to Carrier A in how to process the URI. If the URI is of another registry then the URI is used to address a query to that registry. If the URI is of an ingress point of a terminating network then the URI is used in the addressing of the call signaling protocol to that ingress point.

The method of disambiguation could be implicit, such as expressed through the form of the URI, or explicit such as a yet to be defined service indicator. To date there is no industry standard for this method. Further, since federations that use registry interworking Approach X are not necessarily organized along national boundaries, any chosen method must be extensible internationally.

5.12.1.2 Registry Interworking Using Exchange of TN/URI Records (Approach Y)

Registry Interworking Using Exchange of TN, URI Records is a form of registry interworking whereby a registry R1 can import TN, URI records from registry R2. The received data records consist of a TN and at least one URI for an ingress point to a terminating network. There is clarity on the meaning of the routing data received from R1 by a Carrier A.

One burden of this method is that a change in the URI content of a record in R2 requires a timely update to the copy of that record in R1.

5.12.1.3 Provisioning Interfaces Between Registries to Exchange Routing Data

Factors that should be taken into account for a registry interworking provisioning interface include the following:

- Industry standards compliant and widely adopted.
  - Promotes ease of technical integration among registry providers.
  - Provides confidence in continuity of deployed interfaces.
- Extensible.
  - Must support service interconnection for all IP-enabled services using telephone numbers as identifiers, including VoIP voice calling.
  - Must be extensible to multi-media calling, messaging such as MMS, and IMS-enabled services.
  - Must be extensible to all IP-enabled services using other identifiers such as domain names.
- Secure.
  - Along with the routing data itself, the interface should allow exchange of policy information concerning which Carriers are authorized to access what routing data. For example, with reference to registry interworking Approach Y outlined above in Section 4.14.1.2 "Registry Interworking Using Exchange of TN, URI records (Approach Y)", Carrier A might allow (1) Carrier B to send VoIP calls to a given URI associated with a range of TNs, and allow Carrier B to send MMS messages to a second URI associated with a range of TNs; and (2) disallow Carrier C from accessing any routing data.
  - There is no guarantee that policy information be available in the other registry.
  - The routing data and policy data exchanges must be protected so that only authorized parties, such as the recipient registry, can access the information exchange.
- Robust error handling.
  - The recipient registry must be able to list errors per data record to the sending registry for exception handling. The sending registry should be able to respond with corrected records.
- Trouble handling.
  - Methods are needed to detect, report, and resolve troubles.
- Efficient initialization.
  - For initializing another registry with existing records, large data files such as files with millions of records need to be efficiently processed. This could be optimized through an off-line bulk load feature.
- Flow through mechanization.
  - Flow-through provisioning with continuous updates must be supported in order to timely maintain accurate routing and policy data. A candidate protocol is SOAP/XML, defined via Web Services Description Language (WSDL).

5.12.2 Action

An investigation into the need for new work should be initiated by TMOC and OBF regarding provisioning interfaces between registries to exchange routing data along with the other provisioning action(s) in this document. The NIIF should review this section for possible impacts to and areas needing coordination with their work.

5.13 Centralized Upper Tier Registry (CUTR)

5.13.1 Assessment

Industry feedback to determine the feasibility of the CUTR as the mechanism to resolve inter-carrier VoIP call routing must take place including the following considerations:

- The mechanism for populating a registry.
- The need for mechanisms to authenticate/validate a federation's assertion that a number to be registered in the CUTR actually belongs to one of its carrier members.
- The need for mechanisms to enable a non-member carrier to query a registry (e.g., Figures 12 and 14, Step 6).

5.13.2 Action

Given the current state, interested parties (including ATIS members) should establish the feasibility of the CUTR as the mechanism to resolve inter-carrier VoIP call routing before major standards work specifically on CUTR is initiated. If an ATIS member consensus emerges on the need for CUTR, then consideration must be made for the development of a mechanism enabling a non-member carrier to query a registry and the development of a mechanism to authenticate/validate a federation's assertion that a number to be registered in the CUTR actually belongs to one of its carrier members.

5.14 Industry Implementation Approach

5.14.1 Assessment

See Section 3 descriptions of alternate implementation approaches.

5.14.2 Action

A workshop for inter-forum collaboration should take place by end of 2Q2008 (dependent upon known deliverables of the Global System for Mobile Communications Association (GSMA) and ENUM LLC). It is important to understand that this workshop is seen as a starting point for such broad interest discussions regarding evaluating a single IVCR major implementation

alternative and that additional standards gaps/issues could be identified as the industry works on the various implementation options.

5.15 Interfaces

5.15.1 Assessment

There are five categories of inter-carrier/inter-entity interfaces in the reference model.

1) The network-to-network interface: This provides for call completion from one carrier to another. As stated previously, that interface is specified by the ATIS VoIP NNI ANS, which uses SIP for session establishment.
2) The registry database query interface: The long term solution is assumed to be the ENUM interface. Near term, other alternatives such as SIP may be employed as well.
3) Registry database provisioning interfaces: This provides for provisioning records into registry databases, both within a federation and across federations. The issue of a standard registry provisioning interface deserves further study to determine protocol or protocols to be used as standard registry provisioning protocols.
4) Authority database interfaces: This provides for NANPA and LNP for validation of number ownership by the carrier provisioning a record. Current industry implementations use Telcordia's LERG Routing Guide and data from the NPAC and those may suffice going forward.
5) The registry-to-registry provisioning interface: This interface facilitates registry interworking between registries to exchange routing data.

5.15.2 Action

To further the provisioning action, as industry experience with the use of registry databases accumulates, the TMOC should review whether registry database provisioning and authority database interfaces would benefit from further standardization, keeping in mind potentially relevant work in the IETF. (That is in addition to the recommended action for the IETF in Section 5.13 regarding identifying the nature of the address in a registry database record as returned in a response to a registry database query.) See other interface actions within Section 5.

5.16 Routing Information

The following considerations related to routing information have been identified.

5.16.1 Bilateral Interconnection

5.16.1.1 Assessment

Routing information for direct interconnect between two carriers based on ENUM LLC's provider/infrastructure ENUM is being planned in the short term.

5.16.1.2 Action

Since this activity is already underway and given the existing base of supporting standards, ATIS PTSC should monitor this area to gain insight into the practical issues needing standardization or changes to existing standards. This recommendation does not preclude interconnection between carriers using other methods.

5.16.2 Transit Networks

5.16.2.1 Assessment

The issue of routing information for "transit networks" is being addressed by IETF SPEERMINT. However, in the initial stages, interconnection can feasibly be provided by direct connection, without the need for "transit networks". Also see Section 4.

5.16.2.2 Action

ATIS PTSC should monitor the work conducted by the IETF SPEERMINT Working Group, specifically on the transit network model. The following elements should be addressed in a transit network model (either at the IETF SPEERMINT or within ATIS PTSC):

- How are Gateway addresses or URIs of intermediate carriers communicated on the labeled interfaces?
- Is there a need for communicating carrier preferences?
- What are the needs for communicating policy information regarding security and billing on interfaces?
- How are alternate routes or route costs communicated? Alternate routes may be used for both redundancy as well as least cost when multiple routes or carriers are available.
- What is the proper sequence of registry queries and signaling messages to signal a path through multiple SIP-aware transit carriers and gateways?
- Can recursive methods of registry access and signaling be used and are they efficient?

5.16.3 International Interconnection

5.16.3.1 Assessment

Routing information for interconnect (direct or via transit) beyond North America is in the scope of IETF's SPEERMINT work and can be treated as a longer-term issue.

5.16.3.2 Action

In the short term, ATIS PTSC should monitor progress in SPEERMINT, and revisit once there is real deployment experience in North America. To the extent that the industry can reach a consensus on a global tree, international routing information work will likely fall under the scope of ITU-T SG2/Q1.

5.17 Inter-network Management

5.17.1 Assessment

Several SDOs (ITU-T, 3GPP, 3rd Generation Partnership Project 2 (3GPP2), Worldwide Interoperability for Microwave Access (WiMAX) Forum) are working on further defining the policy control layer that sits below the session control layer and above the packet transport layer to enable the authentication, authorization, and QoS control. Of special interest is the potential need for components in this layer to interact across operator boundaries. For example, in mobile systems, the visited and home networks may need a well-defined interface to interconnect V-PCRF and H-PCRF (policy and charging rules function). In fixed networks, agreement across multiple networks for A and B parties may be needed to ensure consistent end-to-end QoS.

5.17.2 Action

The PRQC, in collaboration with the TMOC and PTSC, should monitor the work to define the policy control layer to ensure policy and charging rules function interfaces are defined which support IVCR.

6 CONCLUSIONS

Based upon its assessment, the IVCR-FG's key conclusions are:

- Standards programs are in place to provide the fundamental interface standards required to support any implementation alternative.
- The key standards gaps that may need to be addressed are related to registry provisioning and ENUM service types (e.g., to distinguish between a gateway vs. an end user.
- A broad consensus across industry stakeholders is required in order select a specific call routing implementation alternative; an industry workshop in 2008 is recommended as the starting point to achieve this.

In summary of the above sections, the IVCR-FG concludes that the fundamental interface standards that will facilitate IVCR implementations and deployments either are in place, are already being actively worked in standards or that the standards gaps can be fulfilled. However, at this time, there is no clear consensus on a particular IVCR implementation

alternative, due especially to the lack of sufficient industry experience with the various near term implementation alternatives currently being considered. Thus, a broad consensus building process should be established to go from the recommendations presented here, with the intent to eventually target a single primary implementation alternative.

The existing work in the ATIS PTSC committee on VoIP network interconnect provides a solid foundation for delivering a call from one carrier to another, once the next carrier to receive the call has been selected. The issues explored by the IVCR-FG are largely related to the routing registry databases used to determine the next carrier, whether there are single or multiple registries, carrier internal or external registries, flat or hierarchical relationship of multiple registries, registry and inter-registry provisioning interfaces. Moreover, there exists a potential ambiguity in types of URIs that a registry may contain (e.g. URI of end user vs. URI of gateway).

Based upon its assessment, the IVCR-FG concludes that multiple interconnect federations will exist, at least in the short term, because communities of shared interest are already working on different federated solutions. In addition, the global need for national and multi-national interconnection also moves the industry to a multiple federation environment. Some standards development can be completed to address issues that currently exist, however further assessment and standards development may be needed once more experience has been gained through the implementation of specific call routing alternatives or deployments. Included in this further assessment is the determination of what standardization of registry database provisioning and authoritative database interfaces is needed.

In support of the industry's need to fulfill the above, the work items identified in this document will enable the industry to evaluate a method and model for IVCR implementation alternatives and any additional standards gaps/issues identified in the course of implementation experience. Fundamental to this process is the need for a workshop for inter-forum collaboration in the near term.

APPENDIX A: PUBLIC SAFETY AND EMERGENCY SERVICES

A.1 Public Safety

A.1.1 E9-1-1

The National Emergency Number Association (NENA) is in the process of drafting a set of standards addressing 9-1-1 calls in the context of emerging technologies. These are being developed by its Voice over Internet Protocol (VoIP)/Packet Committee. The Alliance for Telecommunications Industry Solutions (ATIS) Emergency Services Interconnection Forum (ESIF), which includes NENA, is working to coordinate standards development efforts through its Next Generation Emergency Services (NGES) committee. Telecommunications Industry Association (TIA) also has a committee (TR 41.4) that is addressing issues related to E9-1-1 and IP telephony. In its *Work Plan for Achieving Interoperable, Implementable End-to-End Standards and Solutions*, the ATIS VoIP Focus Group assessed two technical issues that must be resolved to ensure public safety in a VoIP environment:

- the physical location (mobility) that a VoIP endpoint possesses (road warrior scenario) and,
- the transition of the Public Safety Answering Point (PSAP) infrastructure to an IP-based interface.

The Work Plan recommended that solutions to these issues be thoroughly studied by all concerned industry organizations in order to develop a consensus resolution. The Work Plan further recommended that the industry support ATIS ESIF as the primary group to progress the necessary standards to support E9-1-1 in a VoIP environment. In the January 24, 2007 status report of the VoIP Work Plan, it states, "NENA is completing the I2 Phase of 911 VoIP which will allow i2 solutions to be deployed. ESIF will do the standards. ESIF took active steps to establish the ESIF IP Coordination Ad Hoc Subcommittee (IPCOAD) to coordinate the VoIP/911 work with NENA. In addition NENA is in the process completing the I2 Phase of VoIP/911 standards which will allow I2 solutions to be deployed. After NENA's work is completed, the ESIF IPCOAD will work on VoIP/911 American National Standards, as appropriate. In addition ESIF established Task Force 34 to work next generation E9-1-1 messaging standards – in support of VoIP and Next Generation Network (NGN) 9-1-1 messaging." Since that work plan was published, NENA's Interim VoIP Architecture for Enhanced 9-1-1 (i2) was published. It's Functional and Interface Standards for Next Generation 9-1-1 (i3) is currently being circulated for public comment. The work of ESIF's IPCOAD group has been folded into the NGES. Using NENA's outputs, NGES is coordinating standards work for Internet Protocol Multimedia Subsystem (IMS)-based emergency services standards within ATIS.

The IETF has formed the Emergency Context Resolution with Internet Technologies (ECRIT) Working Group. The group is addressing the association of the physical location of the end user with the appropriate emergency services center, such as E9-1-1 PSAPs, in call routing, including video and text messaging. The development of these protocols addresses the use of the emergency caller's location to provide routing to the next step network or to the PSAP. ECRIT will work closely with other relevant industry groups such as NENA and will address privacy and security-related issues in its documents. To date, the group has not produced any Request for Comments (RFCs), but is progressing a number of Internet-Drafts, including:

- *A Uniform Resource Name (URN) for Emergency and Other Well-Known Services*, describes a Uniform Resource Name for services, such as emergency services, that are context-dependent, e.g., user location.
- *Requirements for Emergency Context Resolution with Internet Technologies*, defines requirements for context resolution for VoIP emergency calls.
- *Location-to-URL Mapping Architecture and Framework*, describes architecture for mapping geographic location information to URLs.
- *Framework for Emergency Calling using Internet Multimedia*, describes how various IETF protocols and mechanisms are combined to place emergency calls.

In addition, the SIP Working Group is developing *Location Conveyance for the Session Initiation Protocol*, a function critical for emergency call centers in identifying the location of the calling party.

Another IETF Working Group, Geographic Location/Privacy (geopriv), is addressing the security and privacy implications and requirements related to the transfer of geographic location information to location-based applications, such as E9-1-1 PSAPs.

On June 3, 2005, the Federal Communication Commission (FCC) issued its First Report and Order and Notice of Proposed Rulemaking on E9-1-1 Requirements for IP-Enabled Service Providers (FCC 05-116). The Order required interconnected VoIP service providers to provide E9-1-1 capabilities to their subscribers no later than 120 days from the effective date of the Order, and also required them to notify their current users that VoIP service does not always provide automatic location information to PSAPs when a 911 call is made. Customers not acknowledging receipt of that notification were to be cut off from service. The effective date of the Order was July 29, 2005, thirty days from the date of publication in the Federal Register. The FCC subsequently extended the original deadline by a month.

In its subsequent September 27, 2005 Public Notice, the FCC stated that it will not take enforcement action against VoIP service providers who have successfully notified at least 90% of their customers of the limitations of VoIP in emergency calling. In their Public Notice, the FCC acknowledged the efforts of VoIP providers in notifying their customers. Many providers had hit the 100% notification mark, with many more exceeding 90%. The FCC determined that these providers would not face enforcement of the original ruling. VoIP providers who had not achieved the 90% goal could face enforcement proceedings on October 31, 2005. They were required to file an update on their compliance efforts with the FCC as of October 25, 2005.

A.1.2 Lawfully Authorized Electronic Surveillance (LAES)

The Communications Assistance for Law Enforcement Act (CALEA) was enacted in 1994 to assist law enforcement agencies in conducting electronic surveillance and to ensure that service providers have the technology and capacity to meet the obligations of the Act. The initial standards work in support of CALEA was developed in a joint standards environment with ATIS and TIA members participating. Using the operating principle and guidelines of TIA, this joint work was developed in the Lawfully Authorized Electronic Surveillance (LAES) Ad Hoc Group. This joint committee has published a series of CALEA technical standards, including J-STD-025 and-J-STD-025A. Recently, ATIS and the TIA published a revision to their joint

standard, American National Standards Institute (ANSI)/J-STD-025-B-2006. J-STD-025A and J-STD-025B support wireline and wireless voice and data LAES/LI.

In 2003, the ATIS Packet Technologies & Systems Committee (PTSC) LAES Subcommittee developed ANSI T1.678-2003, *LAES for Voice over Packet Technologies in Wireline Telecommunications Networks*. Version 1 of T1.678 provided support for VoIP services providing basic SIP call control and basic H.323 call control for IP. In 2006, Version 2 of T1.678 was completed. Version 2 added support for supplementary services such as hold/retrieve, multi-party calls, and call transfer. There is also currently an outstanding default letter ballot for an addendum to T1.678v2, which includes many technical changes to the document.

In February 2007, the ATIS' PTSC LAES Subcommittee approved ATIS-1000013.2007, *Lawfully Authorized Electronic Surveillance (LAES) For Internet Access and Services (T1.IAS),* which was published in March 2007. The focus of T1.IAS is on the portion of the network that facilitates subscriber access to the Public IP network. Subscribers may obtain IAS from a provider that uses owned, leased, or re-sold facilities.

The ATIS PTSC LAES Subcommittee has also developed a data buffering document (ATIS-1000021, *Data Buffering (Short Term Storage) in an Internet Access and Services LAES Environment) for the* use of buffering (short term storage) as an adjunct function to the intercept process.

A.2 Emergency Services

In the Public Switched Telephone Network (PSTN), the purpose of the Government Emergency Telecommunications Service (GETS) is to provide a greater likelihood that callers using this special arrangement will complete their calls during periods when the telephone network is congested. GETS calls are marked with a special "high probability of completion" (HPC) designation to denote its enhanced status in the network.

The term HPC is used to describe a feature or process that elevates the class of a call above the routine or normal level. The vast majority of calls crossing the domestic switching network are classified as routine or normal. A call's classification is associated with its SS7 message (Initial Address Message or IAM). Higher classifications are currently reserved for administrative and maintenance calls and network control functions. When the network is under stress or congested, certain SS7 messages and calls are given priority access to congested points on the network by virtue of their higher classifications. Plain Old Telephone Service (POTS) calls have a lower classification on the network. GETS calls carry POTS classifications. The HPC feature would allow signaling messages assigned to GETS calls to carry a higher network classification. This would allow them access to the network that would, under abnormal conditions, be denied or blocked.

Another GETS feature is Enhanced Automatic Carrier Routing (ACR). ACR gives GETS calls access to three IXCs with each origination. The ACR feature has the effect of putting the facilities of the three major IXCs into a single large pool of outgoing trunks. The "large pool effect" gives the GETS caller a better probability of not being blocked in the originating office. However, even with the ACR feature, a call can encounter a busy condition outside of the originating switch that might block the call.

The Enhanced ACR (E-ACR) feature ties in SS7 call progress messages with the ACR function. With the E-ACR feature, calls that are successfully routed out of the end office, but are then blocked beyond the access tandem switch, can be re-tried. The new switch software will return control of GETS calls to Advanced Intelligent Network (AIN) programming (E-ACR) when the SS7 network reports the BUSY or BLOCK condition. The (E-ACR) function will attempt to complete the call using the remaining routes (IXCs) in the ACR.

As for GETS-like functionality in the IP space, significant standards work on Emergency Telecommunications Service (ETS) took place in the former Committee T1 Technical Subcommittees (i.e., T1S1, T1A1, T1M1, and T1P1). The ATIS PTSC is also continuing the development of NGN ETS. At their January 2006 meeting, the PTSC approved for release Letter Ballots of the ETS draft and the supporting Resource Priority Header specification.

At the ATIS Network Interconnection Interoperability Forum (NIIF), the National Communications System (NCS) of the Department of Homeland Security is coordinating GETS industry implementation. This NIIF work includes development of "IAM Priority Test for Interconnects" test scripts to verify the proper Integrated Services User Part (ISUP) IAM Message Transfer Part (MTP) priority setting for interconnection of POTS, GETS, and Wireless Priority Service (WPS) calls. NIIF is working on agreements related to National Security/ Emergency Preparedness (NS/EP) call difficulties when some portion of the call is served by VoIP technology. This includes examination of trunking arrangement issues between VoIP and Local Exchange Carrier/Interexchange Carrier (LEC/IXC), and routing procedural problems unique to the NS/EP Numbering Plan Area (NPA).

In addition, the IETF's Internet Emergency Preparedness (ieprep) Working Group (now concluded) developed requirements in support of emergency preparedness in IP telephony. The working group published a number of RFCs related to the implementation of emergency preparedness services, the identification of gaps in existing standards and protocols, and requirements for use in new protocol design.

The ieprep Working Group produced seven Informational RFCs:

- RFC 3487 – *Requirements for Resource Priority Mechanisms for the Session Initiation Protocol (SIP)*, which summarizes the use of SIP for resource access prioritization.
- RFC 3523 – *Internet Emergency Preparedness (IEPREP) Telephony Topology Terminology*, which defines naming conventions for use in emergency preparedness phone calls.
- RFC 3690 – *IP Telephony Requirements for Emergency Telecommunication Service (ETS)*, which defines requirements supporting IP telephony ETS.
- RFC 3689 – *General Requirements for Emergency Telecommunication Service (ETS)*, defines requirements in support of ETS that are more general in nature than those defined in RFC 3690.
- RFC 4190 – *Framework for Supporting Emergency Telecommunications Service (ETS) in IP Telephony*, which provides a framework for support of authorized IP telephony ETS.
- RFC 4375 – *Emergency Telecommunications Services (ETS) Requirements for a Single Administrative Domain*, defines requirements that support ETS within a single administrative domain.
- RFC 4958 – *A Framework for Supporting Emergency Telecommunications Services (ETS)*

within a Single Administrative Domain, discusses a number of protocols and how each supports ETS within a single administrative domain.

The ITU-T's Study Group 11 has developed signaling requirements to support the International Emergency Preference Scheme (IEPS) and ETS. The study group has produced Q.Sup 53, *Signaling support for International Emergency Preferential Scheme (IEPS)*. Study Group 11's Work Program also includes *Signaling Requirements to Support the Telecommunication for Disaster Relief (TDR) in IP Networks*.

Other industry standards work related to ETS includes the ITU-T Study Group 2's Recommendation E.106 *International Emergency Preference Scheme for Disaster Relief Operations (IEPS)*, and European Telecommunications Standards Institute (ETSI) Telecoms & Internet converged Services & Protocols for Advanced Networks (TISPAN) Working Group 02's *System Description for Emergency Telecommunications Service in TIPHON* (Telecommunications and Internet Protocol Harmonization Over Networks) (Document No. TS102 302-2, Draft 0.0.8 available 2/26/04). The PARLAY group's Parlay 4.1 allows for a call control device to use an Application Programming Interface (API) to enact ETS.

In its *Work Plan for Achieving Interoperable, Implementable End-to-End Standards and Solutions*, the ATIS VoIP Focus Group recommended the use of Parlay gateways as a means of providing ETS on call origination.

The NCS of the DHS issued a Request For Information (RFI) seeking technical information regarding assured communications for voice and data over the Internet.

APPENDIX B: DEFINITIONS

Address Translation is the mapping from one value or format to another value or format that identifies the equivalent end-target destination. An ENUM example is the mapping of an E.164 DN to a SIP URI address, which both identify the called party.

Routing is the mapping of a target destination to a next hop destination that will directly or indirectly move the signal or message closer to the target destination.

- A *VoIP routing* example is the mapping of an end-user SIP address to an egress or ingress SBC that can reach the target domain. Typically, SIP Route headers are used to order intermediate hops.
- An *IP routing* example is the mapping of a target IP address (homed to a target router) to an outgoing link to the IP of a next hop router.
- An *ENUM routing* example is the mapping of an E.164 DN target destination to the address of an intermediate Service Provider proxy or SBC that must be traversed to reach the target destination.

Both *Address Translation* and *Routing* rely on internal tables or external databases to store the mappings. Those data stores may be populated and updated statically or dynamically by corresponding provisioning or routing (e.g. Border Gateway Protocol (BGP)) protocols.

Carriers are those companies who are eligible to be assigned numbers from NANPA. Wireless Commercial Mobile Radio Service (CMRS) providers are carriers.

- *Interconnected VoIP providers* are companies who use numbers sub-assigned from a LEC.

- A *Transit VoIP Carrier* for a given call is one who performs application layer (e.g. SIP) processing in VoIP call routing, but does not provide service directly to the end user on the call.

APPENDIX C: VOIP WORKPLAN UPDATE

Several action items originally identified by the ATIS VoIP Focus Group have been addressed by the ATIS IVCR-FG. This appendix identifies the key action items applicable to IVCR and an update for each as concluded during the course of developing the IVCR Assessment and Workplan.

VOIP.2.3.2.A: Review and consider the various alternatives outlined for SIP based packet interconnect architectures, specify which one (or more) should be used (See 2.3.2.A).
IVCR Status Update: The IVCR evaluated the alternatives for SIP based packet interconnect to identify gaps that needed to be addressed. The group concluded that the standards required for basic SIP interconnect were largely already in place. Some work is required to specify the interconnection architecture, including aspects such as physical interconnect, bandwidth provisioning, and secure connectivity, but most of this is engineering and configuration, and (at least initially) outside the scope of standards. The one area requiring additional clarity was mechanisms to identify the target carrier, and the appropriate interconnect point for that carrier. This topic was explored by the IVCR in some depth, and specific recommendations provided. It is recommended by the IVCR-FG that the VoIP workplan action be considered closed.

VOIP.6.1.2.A: Conduct an analysis to determine if Public ENUM meets the routing requirements for VoIP carrier interconnection. If Public ENUM does not meet all the requirements, identify the incremental requirements that need to be satisfied through other means.
IVCR Status Update: The IVCR concluded that Public ENUM does **not** meet the routing requirements for VoIP carrier interconnection. This has also been recognized by the IETF, and they are working on Infrastructure ENUM (I-ENUM) to address this gap. The ENUM LLC is also planning to include I-ENUM in its initial deployment. It is recommended by the IVCR-FG that the VoIP workplan action be considered closed.

VOIP.6.1.2.B: The industry is in need of a consensus on how to balance cost and simplicity against end-user security and privacy. This will be an issue for the ENUM LLC to resolve.
IVCR Status Update: The current plan is that I-ENUM as deployed by the LLC will not be hosted in an open, public database. Access to I-ENUM data will be restricted to qualifying carriers. This will address the end-user security and privacy issues. It is recommended by the IVCR-FG that the VoIP workplan action be considered closed.

APPENDIX D: ACRONYMS

3GPP	3rd Generation Partnership Project
3GPP2	3rd Generation Partnership Project 2
ACR	Automatic Carrier Routing
AIN	Advanced Intelligent Network
ANS	American National Standard
ANSI	American National Standards Institute
AoR	Address of Record
API	Application Programming Interface
ATIS	Alliance for Telecommunications Industry Solutions
BGP	Border Gateway Protocol
BOF	Birds of a Feather (IETF)
BOM	Business Operations Map
CALEA	Communications Assistance for Law Enforcement Act
CC (CC1)	Country Code (1)
CMRS	Commercial Mobile Radio Service
CSCF	Call Session Control Function
CUTR	Centralized Upper Tier Registry
DHS	Department of Homeland Security
DNS	Domain Name System
DoS	Denial of Service
DSL	Digital Subscriber Line
DTMF	Dual-Tone Multifrequency (signaling)
E-ACR	Enhanced Automatic Carrier Routing
ECRIT	Emergency Context Resolution with Internet Technologies
ENUM	E Number Working Group (IETF)
ENUM LLC	Country Code 1 ENUM Limited Liability Company
EP	Emergency Preparedness
EPP	Extensible Provisioning Protocol
eTOM	Enhanced Telecom Operations Map

ETS	Emergency Telecommunications Service
ETSI	European Telecommunications Standards Institute
FCC	Federal Communications Commission
FG	Focus Group
geopriv	Geographic Location/Privacy
GETS	Government Emergency Telecommunications Service
GSMA	Global System for Mobile Communications Association
GW	Gateway
HPC	High Probability of Completion
HSS	Home Subscriber Server
IAM	Initial Address Message
Ieprep	Internet Emergency Preparedness
IEPS	International Emergency Preference Scheme
IETF	Internet Engineering Task Force
IIF	IPTV Interoperability Forum (ATIS)
IMS	Internet Protocol Multimedia Subsystem
IPCOAD	ATIS ESIF IP Coordination Ad Hoc Subcommittee
IPTV	Internet Protocol Television
ISUP	Integrated Services (Digital Network) User Part
ITU	International Telecommunication Union
ITU-T	ITU-Telecommunications Standization Sector
IVCR - FG	Inter-Carrier VoIP Call Routing Focus Group
IXC	Interexchange Carrier
LAES	Lawfully Authorized Electronic Surveillance
LEC	Local Exchange Carrier
LERG	Local Exchange Routing Guide
LNP	Local Number Portability
MTP	Message Transfer Part
MVNO	Mobile Virtual Network Operator
NANPA	North American Numbering Plan Administrator

NAPTR	Naming Authority Pointer
NCS	National Communications System
NE	Network Element
NENA	National Emergency Number Association
NGN	Next Generation Network
NIIF	Network Interconnection Interoperability Forum
NNI	Network-to-Network Interface
NPA	Numbering Plan Area
NPAC	Number Portability Administration Center
NS	National Security
OBF	Ordering and Billing Forum (ATIS)
OSS	Operation Support System
POTS	Plain Old Telephone Service
PRQC	Network Performance Reliability and Quality of service Committee (ATIS)
PSAP	Public Safety Answering Point
PSTN	Public Switched Telephone Network
PTSC	Packet Technologies & Systems Committee (ATIS)
PTSC - SAC	Packet Technologies & Systems Committee- Signaling Architecture and Control Subcommittee
PTSC-SEC	Packet Technologies & Systems Committee- Security Subcommittee
QoS	Quality of Service
RFC	Requests For Comment
RFI	Request For Information
RTP	Real time Transport Protocol
SIP	Session Initiation Protocol
SLA	Service Level Agreement
SMS	Short Message Service
SOAP	Simple Object Access Protocol
SPEERMINT	Session PEERing for Multimedia INTerconnect IETF Working Group
SPR	Service Providers of Record

TCAP	Transaction Capabilities Application Part
TDM	Time Division Multiplex
TDR	Telecommunication for Disaster Relief
TIA	Telecommunications Industry Association
TIPHON	Telecommunications and Internet Protocol Harmonization Over Networks (ETSI)
TISPAN	Telecoms & Internet converged Services & Protocols for Advanced Networks (ETSI)
TMF	TeleManagement Forum
TMN	Telecommunications Management Network
TMOC	Telecom Management and Operations Committee (ATIS)
TN	Telephone Number
TOPS	Technology and Operations Council (ATIS)
UML	Unified Modeling Language
URI	Uniform Resource Identifier
URN	Uniform Resource Name
VoIP	Voice over IP
VPN	Virtual Private Network
WiMAX	Worldwide Interoperability for Microwave Access
WPS	Wireless Priority Service
WSDL	Web Services Description Language
XML	Extensible Markup Language

APPENDIX E: IVCR FOCUS GROUP MEMBERS

Chair	
Pieter Poll	Qwest
Members	
Hui-Lan Lu	Alcatel-Lucent
Igor Faynberg	Alcatel-Lucent
Gary Munson	AT&T
Steve Lind	AT&T
Mike Hammer	Cisco
Anna Miller	Deutsche Telekom AG/ T-Mobile
Tom McGarry	NeuStar
Chris Celiberti	NeuStar
Webb Dryfoos	NeuStar
Jim McEachern	Nortel
Mike Fargano	Qwest
Kari Teraslinna	Qwest
Douglas Babcock	Syniverse
Bryan Whittle	Telcordia
Gary Sacra	Verizon
Jim Baskin	Verizon
ATIS Staff	
Tom Payne	
Martha Ciske	
Lisa Wiseman	