1200 G Street, NW
Suite 500
Washington, DC 20005
www.atis.org

Packet Technologies and Systems Committee (PTSC)

Joe Zebarth
Chairman
zebarth@nortel.com

Steve Barclay
ATIS Director, Standards Development
+1 202-434-8832
sbarclay@atis.org

Standards that Drive the Business of Communications

December 19, 2007

Mr. Stephen Hayes
3GPP TSG SA Chairman
stephen.hayes@ericsson.com

RE: Development of Common IMS Standards

Dear Mr. Hayes:

The ATIS Packet Technologies and Systems Committee is responsible for developing requirements and standards for services, architectures, and signalling. As part of its function, it also is responsible for identifying IMS-related requirements which will enable wireline-wireless convergence that, when met, will support the needs associated with the communications operating environment of ATIS members.

This liaison is being sent to inform you that the ATIS PTSC seeks to work cooperatively with you in the development of Common IMS standards. To this end, ATIS PTSC requests that work associated with the current 3GPP Rx interface be developed within the Common IMS structure. Explicitly, ATIS PTSC requests that the current 3GPP Rx interface be aligned with the ATIS Gq / Rq interfaces, and the ETSI Gq' / Rq interfaces to include all access types in general, and wireline access in particular, consistent with the agreed scope of Common IMS.

The attachment provides technical discussion related to this proposal, so as to ensure the proposal is properly understood when it is discussed within 3GPP.

If you have any questions or wish to discuss any of the above, please feel free to contact me.

Sincerely,

Joe Zebarth
ATIS PTSC Chairman

cc: Tim Jeffries, ATIS VP of Technology & Business Development
Steve Barclay, ATIS Director, Standards Development
Adrian Scrase, 3GPP PCG Secretary
Martin Dolly, ATIS PTSC-SAC Chair
Stu Goldman, ATIS PTSC-SAC Vice Chair

Attachment

Discussion

ATIS has traditionally taken the approach of taking an active role in the development of international standards and then adopting them whenever possible, with enhancements to these protocols being specified only where it was necessary to satisfy North American market-specific requirements.

As 3GPP moves to develop a Common IMS it is appropriate that ATIS take an active role in its development. One of the ways ATIS can take part is to input requirements into the standards development process.

In particular the current ATIS architecture adopts the 3GPP Gq interface, with the expectation that this will need to be enhanced for wireline access. It is our understanding that 3GPP has merged the Gq and Rx interfaces into a single interface, labeled Rx in Release 7, as per Figure 1 below.

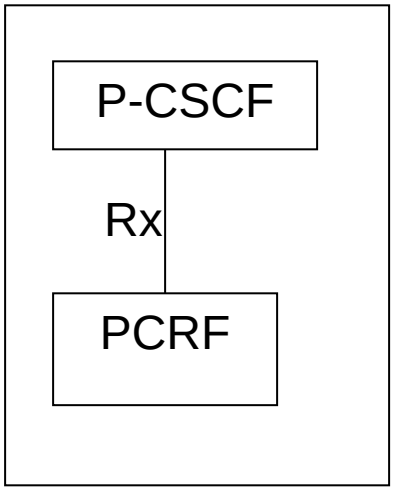

Figure 1: 3GPP Architecture

It is our understanding that TISPAN has taken a similar approach, specifying their version of this interface. However, they have labeled it as Gq', as shown in Figure 2 below. The TISPAN interface from the SPDF toward the A-RACF has changed between R1 and R2, but since the point of this contribution is to encourage alignment, both the R1 and R2 interfaces are shown in Figure 2.

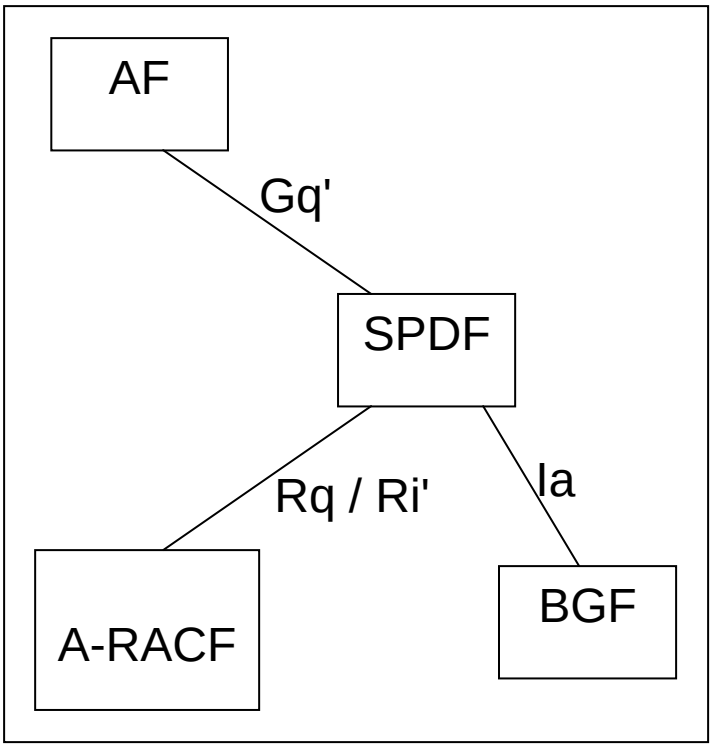

Figure 2: TISPAN Policy Architecture

If these two architectures are combined the result would be as shown in Figure 3 below.

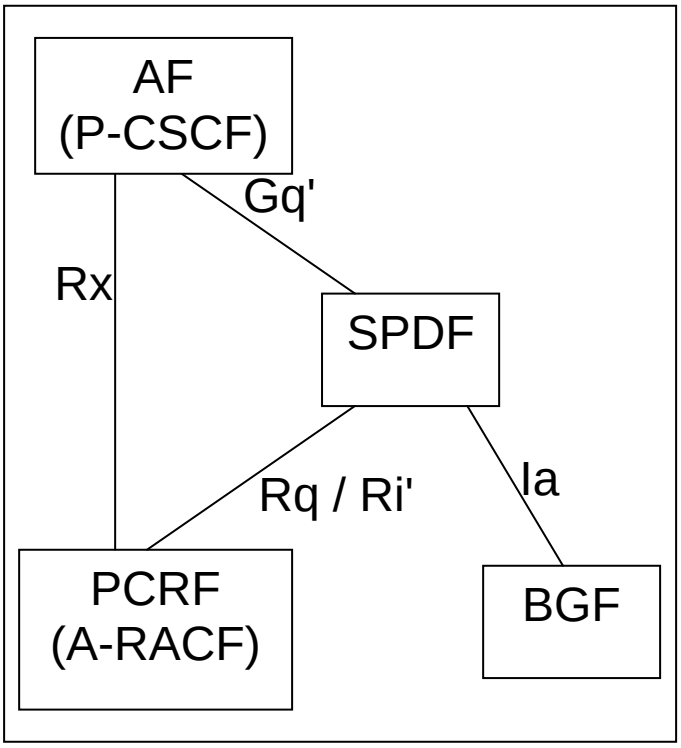

Figure 3: Combined 3GPP / TISPAN Architecture

It is clear that much of the policy related standards work has been driven by access technology specific requirements rather than market-specific requirements. Because this access technology specific standardization was being progressed in parallel in several market-specific SDOs, achieving a single international standard was problematic. However, with the advent of Common IMS achieving a single international standard is a goal to which we should aspire.

It is also clear that there is not an exact correlation between the combined functions shown in Figure 3. However there are strong similarities, and therefore potential value may be realized by initiating an activity to fully align these interfaces.

It is our understanding that if the scope of the existing 3GPP work on the Rx interface is formally expanded, consistent with the definition of Common IMS, to include all access technologies, it should be possible to achieve a unified Rx/Gq' interface applicable to all access technologies. Additionally, the scope of this work should also consider requirements for the Rq interface, which is shown in Figure 3. Based on this, the resulting scope of analysis in 3GPP would include the interfaces shown in Figure 4 below.

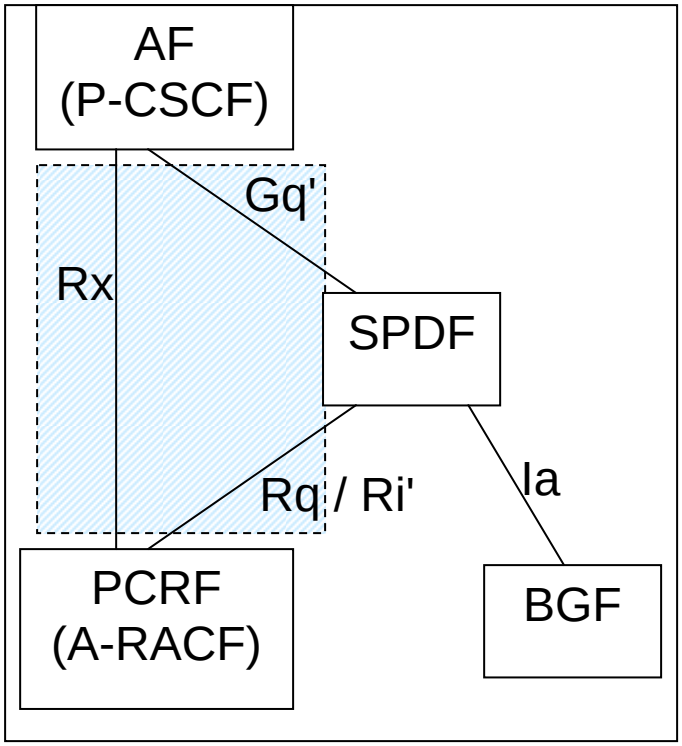

Figure 4: Scope of Proposed 3GPP Policy interface

Proposal

It is proposed that 3GPP expand the work associated with the current Rx interface to explicitly include all access types in general, and wireline access in particular, consistent with the agreed scope of Common IMS.