Node-B Packet Scheduling for LTE (R2-052892)

3GPP TSG-RAN WG2 Meeting #49
Seoul - South Korea
7 - 11 November 2005

Agenda 17.3.2

 © 2005 Nokia

NOKIA
Connecting People

Motivation and introduction

- Node-B packet scheduler is proposed to be split between L1 and L2
  - QoS aware packet scheduling at L2
  - Physical layer aware packet scheduling at L1
- Physical layer features are encapsulated at L1 so that
  - Assignment of frequency-time resource chunks is handled solely by L1
  - L1 control signaling and measurements is only available at L1
  - L1 Hybrid ARQ is only available at L1
- Hiding the L1 details from Layer-2 allows a clean protocol layered split without limiting the degrees of freedom for implementing smart vendor proprietary packet scheduling algorithms

 © 2005 Nokia

NOKIA
Connecting People

Architecture overview [1]

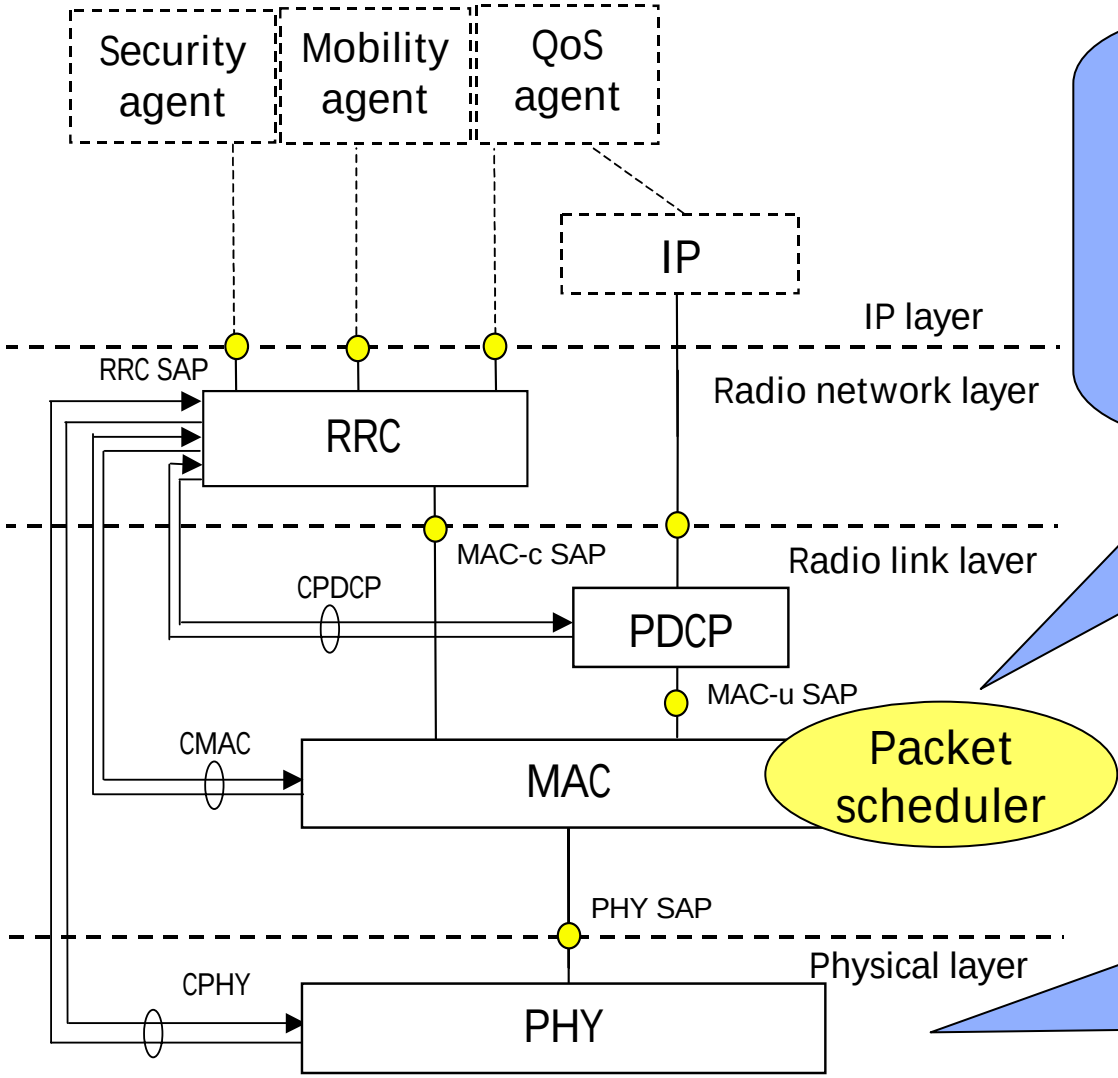

The cell specific Node-B packet scheduler is located at Layer-2.

It is responsible for scheduling the allocated users on the shared channel according to their QoS constraints.

The physical layer is responsible for user multiplexing, adaptive modulation and coding, hybrid ARQ, etc…

[1] R2-052441 - *Protocol Layers and Functions for E-UTRA* - Nokia

© 2005 Nokia

NOKIA Connecting People

L2 PS fundamentals

- The Node-B Layer-2 packet scheduler (L2 PS) is responsible for scheduling of the allocated users so that their QoS requirements are fulfilled
- Terminology summary:
  - Each user, RLID (radio link identifier) has a number of associated data-flows denoted by LCIDs (logical channel identifiers)
  - Each LCID has an associated QoS given by the RLSP (radio link service profile)
  - The RLSP is available for L2 PS from the RRC entity at Layer-3
- The L2 PS selects a number of users for potential scheduling during each scheduling interval = TTI = 0.5 ms.
- The physical layer is then responsible for multiplexing these users on the air interface, this includes
  - Setting the modulation and coding scheme,
  - Deciding which frequency-time resource chunks should be assigned to each user,
  - etc.....

 © 2005 Nokia

NOKIA
Connecting People

Packet scheduling actions per scheduling interval

- For each scheduling interval (0.5 ms), the L2 PS shall perform the following steps:
- **Step #1: Create input vector to the physical layer**
  - Select a subset of RLIDs for potential scheduling during the next period (also known as the *scheduling candidate set*)
  - Specify limits for the amount of data to be scheduled for each of those RLIDs
  - Assign temporary priorities to each of the selected RLIDs
- **Step #2: Physical layer user multiplexing and link adaptation**
  - Given the defined input vector, the physical layer decides the amount of data (transport block size) that can be transmitted for each of the RLIDs in the scheduling candidate set
  - Hence, the physical layer selects the modulation scheme, frequency-time resource allocation for each user
  - Given the transport block size for each RLID, the MAC entity decides how much data should be transmitted for each of the LCIDs belonging to the RLID
- **Step #3: QoS performance monitoring**
  - Given the actual transmitted data for each LCID, the L2 PS updates its internal performance measurements such as average bit rate per LCID, which subsequently can used be used as input to selecting a new input vector to the physical layer (step #1) for the next scheduling period

 © 2005 Nokia

NOKIA
Connecting People

Example of L2 PS QoS enforcement method

- **QoS control** is basically implemented by dynamically selecting the scheduling candidate set and setting the associated parameters for each scheduling period (Step #1 on previous slide)
- Users included in the scheduling candidate set are primarily;
  - Users with the highest relative distance between the specified QoS parameters (i.e. via the RLSP) and the experienced QoS during the recent past
  - A simple measure could be the relative difference between the GBR and the actually served bit rate in the past
- The scheduling candidate set should be larger than what can be transmitted on the physical layer in order to give some degrees of freedom for L1 optimization, i.e.
  - Allowing L1 to benefit from radio channel aware frequency-time scheduling/link adaptation for higher spectral efficiency.

 © 2005 Nokia

NOKIA
Connecting People

Physical layer responsibility

- Given the input from the L2 PS algorithm every scheduling interval, the physical layer multiplex those users on the air-interface, i.e.
  - Allocates frequency-time chunks for the users
  - Selects the modulation and coding scheme for each user
  - Adjust the transmit power
  - etc..
- The physical layer is not necessarily able to schedule all the users suggested by L2 PS. This gives the physical layer some degrees of freedom to primarily select the users with good radio channel conditions (i.e. multi-user scheduling diversity gain).
- Signaling of the information necessary to support channel dependent scheduling is also a responsibility of the physical layer.
- Layer-1 Hybrid ARQ is hidden from L2 PS at the physical layer
  - The physical layer is responsible for multiplexing pending L1 retransmissions together with the new data suggested by L2 PS.
  - Hence, the L2 PS does not have to explicitly schedule L1 HARQ retransmissions.

 © 2005 Nokia

NOKIA
Connecting People

Comments on Uplink vs Downlink L2 PS

- The basic Node-B L2 PS algorithm is very similar for uplink and downlink because the physical layer details are hidden from the scheduler.
  - Note that this is achieved by given the physical layer the responsibility for multiplexing of users on the air-interface, including assignment of frequency-time chunks, modulation and coding scheme, etc..
  - Hence, the **L2 PS is in principle independent of the physical layer multiple access scheme** (which is likely to be different for uplink and downlink)
- However, one difference between uplink and downlink L2PS is the available buffer information for each LCID,
  - **Downlink**: The Node-B L2 PS has the exact knowledge of the amount of buffered data for each LCID. This information can be used so only users with pending data are scheduled, etc..
  - **Uplink**: The Node-B L2 PS should preferably obtain partial or full knowledge of UE buffer status via uplink signaling schemes from UEs to their serving cell -> see further discussions on the next slide.

 © 2005 Nokia

NOKIA
Connecting People

UE buffer reports for enhanced uplink L2 PS

- To avoid **blind UL packet scheduling**, users should send buffer status reports to the Node-B, so we e.g. can avoid scheduling users with no data to send
- Blind scheduling is obviously not an optimal solution – especially critical when having an orthogonal multiple access scheme as proposed for LTE
- Hence, it should be possible to configure the UEs to send fast L2 buffer reports in MAC C-PDUs. Some examples
  - Periodic buffer reports per LCID or per RLID
  - Event-based buffer threshold reports per LCID or per RLID
  - etc....
- The exact UE reporting scheme for sending buffer information should be studied further. Fundamental aspects to be considered are:
  - Minimum overhead, while still being sufficient to enable implementation of optimal L2 PS algorithms at the Node-B
  - Versatility, since the optimal UE reporting scheme depends on the service (web-browsing, streaming, VoIP, etc.)

 © 2005 Nokia

NOKIA
Connecting People

Concluding remarks

- An overall frame-work for Node-B packet scheduling on the uplink and downlink shared channels was proposed
- The proposed architecture and functional-split yields:
  - The L2 PS is responsible for the overall scheduling decisions and for QoS control. This includes suggesting to L1 which users to schedule every sub-frame, and how many data to transmit to/from each user
  - The L1 PS is responsible for multiplexing of suggested users per sub-frame, i.e. for assigning frequency-time resource chunks and modulation and coding schemes. This also includes multiplexing of pending L1 HARQ retransmissions.
- The main reasons for the proposed layered split are
  - A stringent protocol layered split, where all physical layer functions (L1 control signaling) are hidden from L2
  - The L2 PS is minimally dependent of the physical layer multiple access scheme and duplex scheme for uplink and downlink

 © 2005 Nokia

NOKIA
Connecting People