R1- 060377: Uplink Throughout Comparison of Localized and Distributed SC-OFDMA

Agenda Item: 13.2.3.2

Baseline System Assumptions

- No interference coordination
- 24 UEs per cell; 1 x 2 antenna configuration
- 5 HARQ processes with Chase combining
- Maximum transmission power = 21 dBm
- 8 dB log – normal shadowing
- 5 dB noise figure
- Path loss 128.1+37.6 log10(R), R in km
- Channel estimation: past, present, future TTI
- MMSE FDE receiver
- 1TTI scheduling delay
- 0 dBi Tx antenna gain
- 14 dBi Rx antenna gain
- Slow outer loop power control
- Sub – Frame structure

CP0	LB	CP	SB1	CP	LB	CP	LB	CP	LB	CP	LB	CP	SB2	CP	LB

Simulation Assumptions

Modulation	QPSK	QPSK	QPSK	QPSK	16QAM	16QAM	16QAM	16QAM
Code Rate	1/5	1/4	1/3	1/2	1/3	1/2	5/8	3/4

3GPP Case	CF [GHz]	ISD [m]	BW [MHz]	Pen. Loss [dB]	Speed [km/h]	Channel
1 [Except for BW]	2.0	500	5	20	3	TU
2 [Except for BW]	2.0	500	5	10	30	TU
3 [Except for BW]	2.0	1732	5	20	3	TU

- 48 sub – carriers per sub – channel
- 6 sub – channels per 5 MHz BW
- Lowest MCS is allowed to schedule if BLER > 0.1 to accommodate cell edge for Case 3. Rely on HARQ

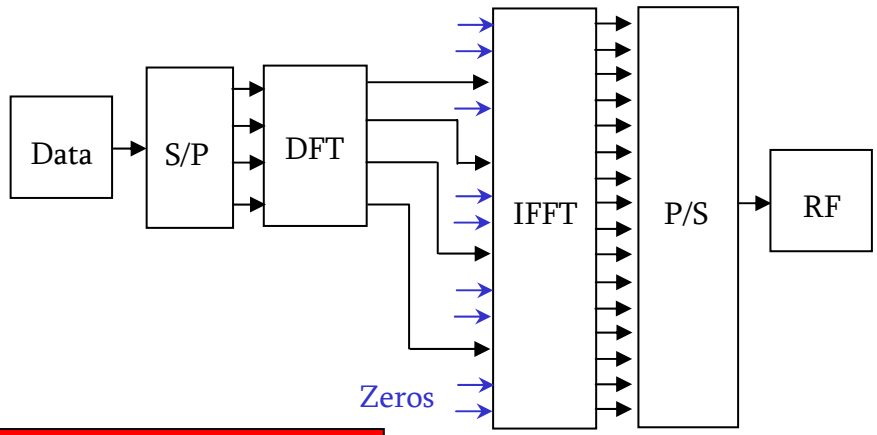

Distributed DFT-S OFDMA

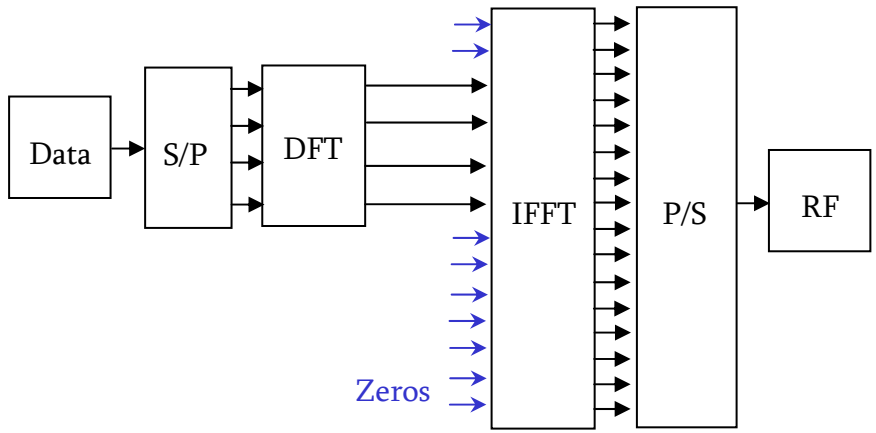

Localized DFT-S OFDMA

Throughout [Spectral Efficiency] Comparison

Scheduler / 3gpp Case	Local RR	Local PF	Local Max C/I	Distr. RR	Distr. PF	Distr. Max C/I
1 [except BW = 5 MHz]	0.41	0.80	1.13	0.40	0.61	1.07
2 [except BW = 5MHz]	0.42	0.77	1.06	0.41	0.65	1.05
3 [except BW = 5MHz]	0.43	0.59	0.89	0.41	0.56	0.80

- Case 1
  - PF: Localized 30% better
  - RR: same
- Case 2
  - PF: Localized 15% better
  - RR: same
- Case 3: Similar performance

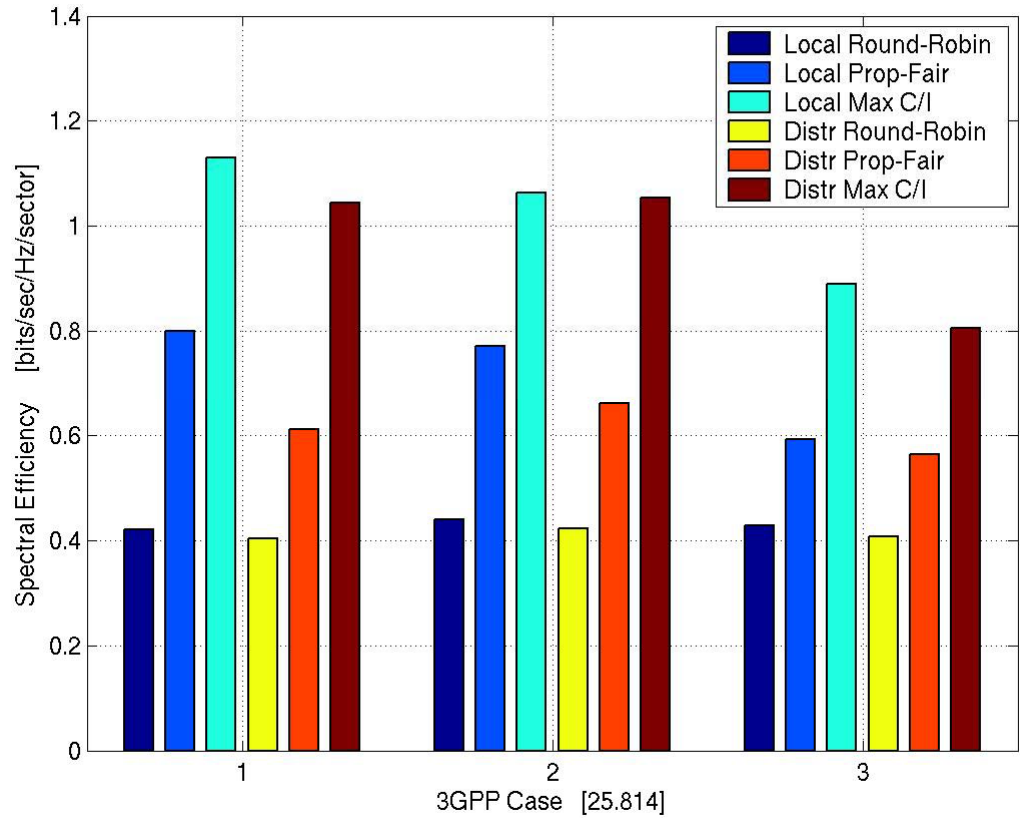

Fairness Comparison

Scheduler / 3gpp Case	Local RR	Local PF	Local Max C/I	Distr. RR	Distr. PF	Distr. Max C/I
1	0.49	0.56	0.18	0.50	0.52	0.02
2	0.48	0.55	0.20	0.50	0.49	0.07
3	0.07	0.06	0.00	0.07	0.06	0.00

- Cell edge defined as 5% CDF
- Fairness = cell edge / average
- Fairness = [0.48 – 0.56]
  - Localized RR
  - Localized PF
  - Distributed RR
  - Distributed PF
- All the same [except Max C/I]

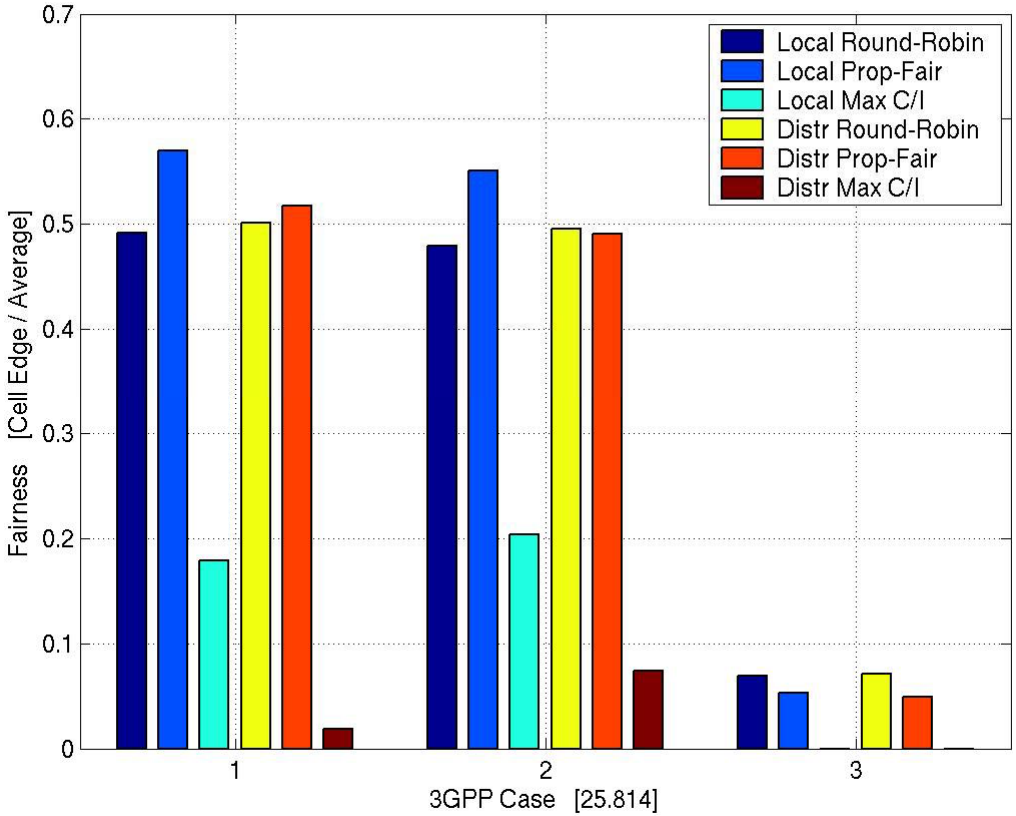

Conclusion

- The LTE spectral efficiency target is met
- Localized is always better or equal than distributed
    - improvement is inversely proportional to UE speed because of the scheduling delay
    - For 3kmh [Case 1], localized offers 30% throughput improvement
    - For 30kmh [Case 2], localized offers 15% throughput improvement
- TI supports localized option