3GPP TSG RAN Meeting #75
Dubrovnik, Croatia, March 6-9, 2017

RP-170429

On further evolution of eMTC and NB-IoT in Rel-15 LTE

Agenda item: 10.1.1

Source: Intel Corporation

Document for: Discussion

IoT support in 3GPP standards

Optimization towards
- low complexity
- energy consumption
- latency tolerance
- enhanced coverage
- large number of connections

since Rel. 8

LTE Rel. 8
Cat.1
10 Mbps DL
20 MHz

Rel. 13

eMTC
800 kbps DL
1.4 MHz

NB-IoT
30 kbps DL
180 kHz

EC-GSM-IoT
200 kHz

Rel. 14

feMTC
4 Mbps DL
Up to 5 MHz

eNB-IoT
~127 kbps DL
180 kHz

Multicast, positioning, higher data rates, improved MCO and power consumption & latency reduction

Rel. 15

efeMTC

feNB-IoT

Further power consumption reduction, enhancements for massive connectivity, improved cell search and SI acquisition, enhanced UE feedback, etc.

Rel. 16/17

5G
mMTC SI

From RAN#74 (Dec 2016) on Rel. 15 mMTC
- *3GPP's IMT-2020 self-evaluations towards mMTC requirements will assess NB-IoT and/or LTE eMTC*
- *NOMA can be proposed for a part of Rel-15 SI*

Evolution of Cellular IoT in LTE Rel.14

Criterion	Cat. 1 (Rel. 8)	Cat. M1 (Rel. 13)	Cat. NB1 (Rel. 13)	FeMTC (Rel. 14)	eNB-IOT (Rel. 14)
Bandwidth	20 MHz	1.4 MHz	180 kHz	Max. 5 MHz, idle mode and CE mode B UL: 1.4 MHz	180 kHz
Deployments/ HD-FDD	LTE channel, no Type B HD-FDD	standalone, in LTE channel / HD-FDD, FD-FDD, TDD	standalone, in LTE channel, LTE guard bands, HD-FDD	standalone, in LTE channel / HD-FDD, FD-FDD, TDD	standalone, in LTE channel, LTE guard bands, HD-FDD
MOP	23 dBm	23 dBm, 20dBm	23 dBm, 20 dBm	23 dBm, 20 dBm	23 dBm, 20 dBm, 14 dBm
Rx ant / layers	2/1	1/1	1/1	1/1	1/1
Target coverage, MCL	145.4 dB DL, 140.7 dB UL (20 kbps, FDD)	155.7 dB	164 dB	155.7 dB	164 dB
Data rates (peak)	DL: 10 Mbps, UL: 5 Mbps	**Cat M1:** ~800 kbps (FD-FDD) 300/375 kbps DL/UL (HD-FDD)	**Cat NB1:** 30/60 kbps DL/UL (HD-FDD)	**Cat M2:** DL/ UL: 4 Mbps/~7 Mbps FD-FDD Max TBS: 1000/2984 (1.4 MHz, DL/UL) 4008/6968 (5MHz, DL/UL)	**Cat NB2:** ~127/~143 kbps DL/UL (HD-FDD)
Latency	Legacy LTE: < 1s	~ 5s at 155dB	<10s at 164 dB	At least the same as Cat.M1 Legacy LTE (normal MCL)	Improved latency compared to Cat.NB1 in good coverage
Mobility	Legacy support	Legacy support	Cell selection, re-selection only	Legacy support	More mobility compared to Cat. NB1
Positioning	Legacy support	Partial support	Partial support	OTDOA with legacy PRS and Frequency hopping. E-CID	OTDOA with new PRS introduced based on legacy PRS. E-CID. No consensus on UTDOA
Voice	Yes	Yes, with limitations	No	Yes, enhanced support	No
Other Optimizations	n/a	MPDCCH structure, frequency hopping, repetitions	NPDCCH, NPSS/NSSS, NPDSCH, NPUSCH, NPRACH, CP optimizations, MCO	Larger BW and TBS support, SC-PTM, HARQ-ACK bundling, etc.	SC-PTM, support of up to 2 DL/UL HARQ processes, non-anchor PRB enhancements

Key Requirements for 5G mMTC (as agreed in TR 38.913)

Massive connection density

- 1 million devices per sq. km in urban environment

Ultra-long battery lifetime

- The target for UE battery life for mMTC should be beyond 10 years, 15 years is desirable

Extreme coverage

- The target for coverage should be 164dB (MaxCL) for a data rate of 160bps at the egress/ingress point of the radio protocol stack in uplink and downlink.

Latency

- No worse than 10 seconds on the UL for a 20 byte application packet (with uncompressed IP header corresponding to 105 bytes physical layer) measured at the MaxCL of 164dB.

Evolution of eMTC/NB-IoT in Rel-15: Meeting the 5G mMTC technical requirements

eMTC and NB-IoT technologies and their evolution in Rel-14 and Rel-15 can meet the IMT-2020 technical requirements for mMTC

- 3GPP's IMT-2020 self-evaluations towards mMTC requirements will assess NB-IoT and/or LTE eMTC

Scope in Rel-15

- For both eMTC- and NB-IoT-based technologies, enhancements in Rel-15 should aim to fill any gaps towards satisfying the IMT-2020 requirements
  - Massive connectivity requirements
  - Further power consumption reduction for even longer battery lifetimes
  - Further coverage enhancements (as necessary)
  - Improved latency performance (as necessary)

For self-evaluations

- RAN1 to align key assumptions and evaluation methodology between eMTC and NB-IoT as much as possible

eMTC and NB-IoT: Power consumption reduction (1/2)

New signals and/or channels for support of wake-up receivers (WUR) [RAN1, RAN2, RAN4]

- For eMTC and NB-IoT, study and specify new signals and/or channels to support low-power wake-up receiver (WUR) that monitors and detects a wake-up signal (WUS) during DRx On cycles
  - Can be used during Connected (Connected mode DRx) or Idle (paging monitoring) states
  - When DL control or data is to be sent, eNB first sends WUS, UE detects this signal and wakes up to listen for control/data
  - Consider related enhancements to paging mechanism to further reduce UE power consumption

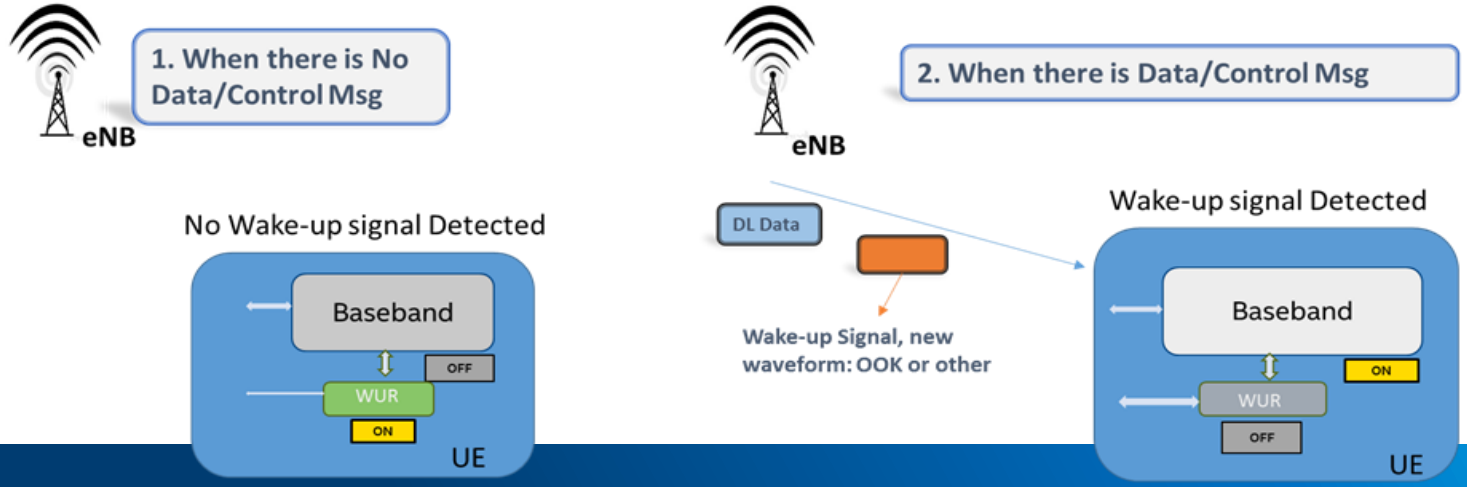

eMTC and NB-IoT: Power consumption reduction and Improved RRM/Link adaptation (2/2)

Further improvements to power consumption reduction: Early termination signaling for (N)PUSCH [RAN1, RAN4]

- In many cases, eNB can decode (N)PUSCH with much fewer repetitions than what is indicated in the UL grant
  - This is especially true for UEs in deep coverage due to the large granularity in the numbers of repetitions that may be configured
  - UE power consumption can be reduced if the eNB, upon successful reception of the UL packet, can indicate to the UE to stop transmission ("early termination" of UL transmissions)
- For eMTC and NB-IoT, support early termination signaling (ETS) in the DL for (N)PUSCH transmissions with large numbers of repetitions

Enhancements to UE feedback for better link adaptation and RRM [RAN2, RAN4]

- RAN4 has identified an RLM enhancement where new events are defined based on early Qin/Qout triggers [R4-1702469/483]
  - RAN2 is requested to define the events
  - Feedback to the network may include excess RL, desired RL, desired AL, desired CE Mode (for eMTC only)
- For NB-IoT, in consideration of a diverse range of traffic types and better link adaptation during longer connected mode sessions, transmitted PHR just during Msg3 may be sub-optimal
  - For NB-IoT, specify support transmission of PHR after the Msg3 transmission

eMTC and NB-IoT: Massive connectivity

Random access and connection establishment/maintenance [RAN2, RAN1, RAN3]

- The current random access (RA) procedure can be too cumbersome considering infrequent small packet transmissions
- For eMTC and NB-IoT, specify simplifications to the RA procedure for eMTC and NB-IoT to support quicker (and with less overhead) transmission of user data, e.g., user data in Msg3/Msg4, 2-step RACH procedure
- For eMTC and NB-IoT, specify further optimizations to the RRC resumption procedure in relation to the stored AS security context

UL grant-free transmissions in connected mode [RAN1, RAN2, RAN4]

- The current mechanisms for resource request and transmission of small data for MO traffic can be quite cumbersome (either via SR or (N)PRACH) and can incur significant system overhead and UE power consumption
- For eMTC and NB-IoT, specify support of UL grant-free transmissions for small data transmission, e.g., BSR, small packets for user data

Enhanced congestion control and load control mechanisms [RAN2]

- Currently, it is not possible to apply load control mechanisms based on coverage levels. However, such a tool is essential for the network to efficiently manage a very large number of devices in the cell.
- For eMTC and NB-IoT, specify access control mechanisms as a function of CE levels based on common RRC signaling (SIB-signaling)

eMTC and NB-IoT: Enhancements to cell search and SI acquisition

Enhancements to cell search and SI acquisition [RAN1, RAN2, RAN4]

- RAN4 has identified issue with prolonged cell search and SI acquisition time for BL/CE and NB-IoT UEs in enhanced coverage [R4-1611001/02]
- For eMTC, study and specify appropriate means to improve cell search performance [RAN1, RAN4]
  - Candidates include, but not limited to, improving link budget via enhancements to LTE PSS/SSS, use of other signals (e.g., NB-IoT NPSS, NSSS), etc.
- Improve the link budget for MIB acquisition by introducing additional (N)PBCH repetitions [RAN1] and SIB1-BR/SIB1-NB acquisition time by introducing a scheduling persistence assumption [RAN2]
- Study whether receiver assumptions can be enhanced with cross-subframe channel estimation and other techniques [RAN4]

eMTC: Coverage and Latency improvements

Enhancements to improve maximum achievable coverage to meet mMTC requirements [RAN1, RAN2, RAN4]

- For eMTC, in Rel-13 the target coverage was 155.7dB MaxCL. Although the actual achievable coverage for the Rel-13/Rel-14 specifications is expected to be > 160dB MaxCL, some physical channels may need further coverage enhancements to meet the 164dB MaxCL target
- Based on the outcome of the initial studies on coverage performance, specify additional enhancements (e.g., increased number of repetitions) to ensure that the mMTC coverage requirements are satisfied
  - Note: The same also applies for NB-IoT (even though NB-IoT was developed in Rel-13 with target MaxCL of 164dB) depending on the outcome of evaluations with agreed assumptions on receiver Noise Figure (NF) for mMTC

Further improvements to latency and overhead reduction [RAN1]

- Specify enhanced time-domain scheduling mechanisms, e.g., scheduling of multiple TBs using a single DCI, to improve latency performance and minimize signaling overhead

NB-IoT: Some specific enhancements in Rel-15

Positioning enhancements [RAN2]

- Support of positioning measurements (OTDOA RSTD, E-CID RSRP/RSRQ) in connected mode
  - In Rel-14 OTDOA RSTD, E-CID RSRP/RSRQ are supported only in idle mode due to impacts to connected mode operation (e.g. eNB is not aware of positioning measurements that the UE needs to perform).
  - However, support of positioning measurements in connected mode is beneficial in order to avoid the signaling overhead due to the idle <-> connected mode transitions.
- Delivery of positioning assistance data per RRC broadcast SIB
  - In Rel-14 only dedicated signaling of assistance data per LPP is supported, however from resource-efficiency perspective broadcast signaling is beneficial to support high volume location requests and/or a high density of NB-IoT UEs.
  - However, amount of assistance data can be large (>2 kBytes) and capacity of NB-IoT cell is limited, therefore more analysis is needed how assistance data can be broadcast efficiently.

Optimizations to MCO [RAN1, RAN2]

- The current specifications for MCO support have room for further enhancements, especially in consideration of the need for efficient scheduling tools to handle a very large number of UEs in the system
- Frequency hopping across different carriers can provide the much-needed diversity gains, thereby improving coverage and/or UE power consumption
- Specify enhancements to MCO including flexible redirection of UEs between different carriers and support of frequency hopping (FH) across different NB-IoT carriers for unicast traffic

Key enhancements in Rel-15 for eMTC & NB-IOT

Applicable to both	eMTC only	NB-IoT only
Power consumption reduction • Support of "wake-up signal/channel" to support wake-up receiver (WUR) for paging monitoring • Support early termination signaling (ETS) in the DL for (N)PUSCH transmissions with large numbers of repetitions **Support of massive connectivity and improved latency:** • Simplifications to random access to reduce overhead, e.g., user data in Msg3/Msg4 • Grant-free UL transmissions in connected mode • CE level differentiation for the access control to better handle congestion scenarios **Enhancements to UE feedback for better link adaptation & RRM** • Introduce support of new UE feedback metrics for better adjustment of numbers of repetitions, enhancements to PHR **Enhancements to cell search and system information acquisition** • Enhancements to cell search and SI acquisition	**Coverage enhancements** • Further coverage enhancements to certain channels as needed **Latency reduction** • Further flexibility in time-domain scheduling	**Positioning enhancements** • Positioning measurements (OTDOA RSTD, E-CID RSRP/RSRQ) in connected mode • Delivery of positioning assistance data per RRC broadcast SIB **Further enhancements to Multi-Carrier Operation (MCO)** • More flexible scheduling/offloading options

All enhancements should aim to minimize the increase of device complexity and cost

Proposed Work Item partitioning

Separate WIs in Rel-15

- One each for eMTC and NB-IOT – *similar to Rel-14*

Self-evaluations of eMTC and NB-IoT technologies against the IMT2020 requirements

- The evaluations should ideally take into account the enhancements specified in Rel-15
- The time-line for the self-evaluation campaigns should be aligned accordingly
  - **Option 1:**
    - Start with an initial evaluation phase that evaluates Rel-14 feMTC and eNB-IoT against the mMTC requirements
    - In parallel start with a set of enhancements approved at RAN 75
      - These objectives may be updated based on identified gaps during the initial evaluation phase.
    - Potential "re-evaluation" phase towards the end of the Release that incorporates the enhancements impacting the KPIs related to mMTC evaluations
  - **Option 2:**
    - Start with an initial set of enhancements approved at RAN 75
    - Self-evaluation phase considering the enhancements in Rel-15
      - The related design details of the Rel-15 enhancements should be fairly stable by the time such evaluations commence

intel®

experience
what's inside™