HSPA VoIP Service Continuity in Rel-7

QUALCOMM Europe

Table of content

HSPA VoIP – WCDMA CS Service Continuity

- What is ***currently*** possible with the current Rel-7
- What ***could*** be possible in Rel-7

What is currently possible in Rel-7

Available Options

- Rel-7 has currently **no** hooks in place to switch an HSPA VoIP Call into a WCDMA/GSM CS Call
  - No standard support for the **PS to CS domain redirection**

- **The only option in the specification** for the network, when the UE is moving out of an HSPA VoIP-capable area, is to switch the UE to legacy non-HSPA channels (i.e. DCH channels) while still anchoring the call in the PS domain
  - i.e. continue the call as “VoIP over DCH”
  - We call this “fallback to non-HSPA channels”
    - Some more details on this “fallback” in the following slides

Fallback to non-HSPA channels

- Some PS RAB configurations exist for Conversational/Speech services
  - Tested configurations available in 34.108
    - Starting from Rel-5
      - 42.8 kbps Conversational-Speech --- Sec. 6.10.2.4.1.59/60
  - Example configurations in 25.993
    - Supported in Rel-99
      - 12.2 kbps Conversational-Speech --- Sec. 7.1.95
      - 12.2 kbps Conversational-Speech --- Sec. 7.1.113
    - Supported in Rel-5 (but not applied to Rel-6 onwards)
      - 40 kbps Conversational-Speech --- Sec 7.1.120
      - 39.6 kbps Conversational-Speech --- Sec 7.1.122
      - 17.6 kbps Conversational-Speech --- Sec 7.1.123
    - Supported in Rel-6
      - 16.8 kbps Conversational-Speech --- Sec 7.1.119
      - 39.2 kbps Conversational-Speech --- Sec 7.1.124
    - Supported in Rel-7
      - 27.6 kbps Conversational-Speech --- Sec 7.1.135/136

Fallback to non-HSPA channels (cont'd)

- Optimized PS RAB configurations for IMS VoIP have been introduced starting from Rel-6

- Operators may have to upgrade the legacy network to make use of these PS RAB configurations

What does this mean?

Typical deployment scenario!

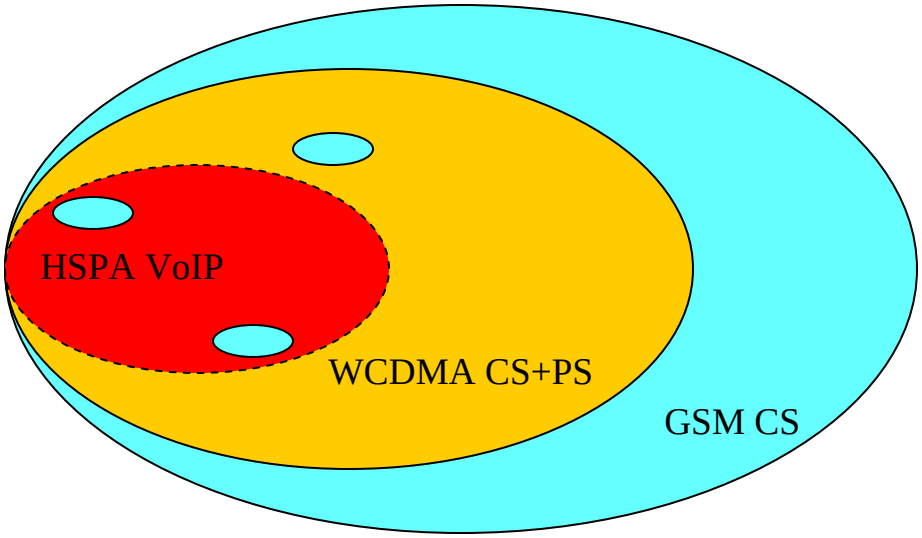

Available mechanisms:

HSPA VoIP → WCDMA PS VoIP

~~HSPA VoIP → WCDMA CS~~

~~HSPA VoIP → GSM CS~~

- Operators have very limited options (basically: one option) to ensure service continuity if they deploy HSPA VoIP
  - **"Continuity" = "Continue VoIP over WCDMA DCH PS"**
  - Service continuity for CS voice is ensured through the inter-RAT handover mechanism
  - WCDMA CS → GSM CS handover fully standardized and tested!

Possible solution for Rel-7

Single Carrier solution for HSPA

- A solution that addresses the HSPA VoIP → WCDMA CS continuity* is however **in theory possible** from Rel-7
  - Simple solution with standard impact localized to UTRAN
    - Exploits the fact that the standard already allows to establish a CS call while in a PS session within the same radio link
    - RRC impacts only for the specification
  - The solution reuses the IMS-based VCC framework developed for Rel-7
    - i.e. establish the CS call while the PS call is still on
      - For a fraction of time, both legs (PS and CS) are active
    - This solution creates a dependency on the IMS introduction
- The solution addresses the following problems:
  - Handovers in connected mode
  - Call delivery in idle mode

* Note that once HSPA VoIP → WCDMA CS is enabled, the HSPA VoIP → GSM CS continuity is addressed with a 2-step approach: HSPA VoIP → WCDMA CS → GSM CS.

HSPA VoIP → WCDMA CS Service Continuity:

Handover in connected mode

HSPA VoIP → WCDMA CS: Handover

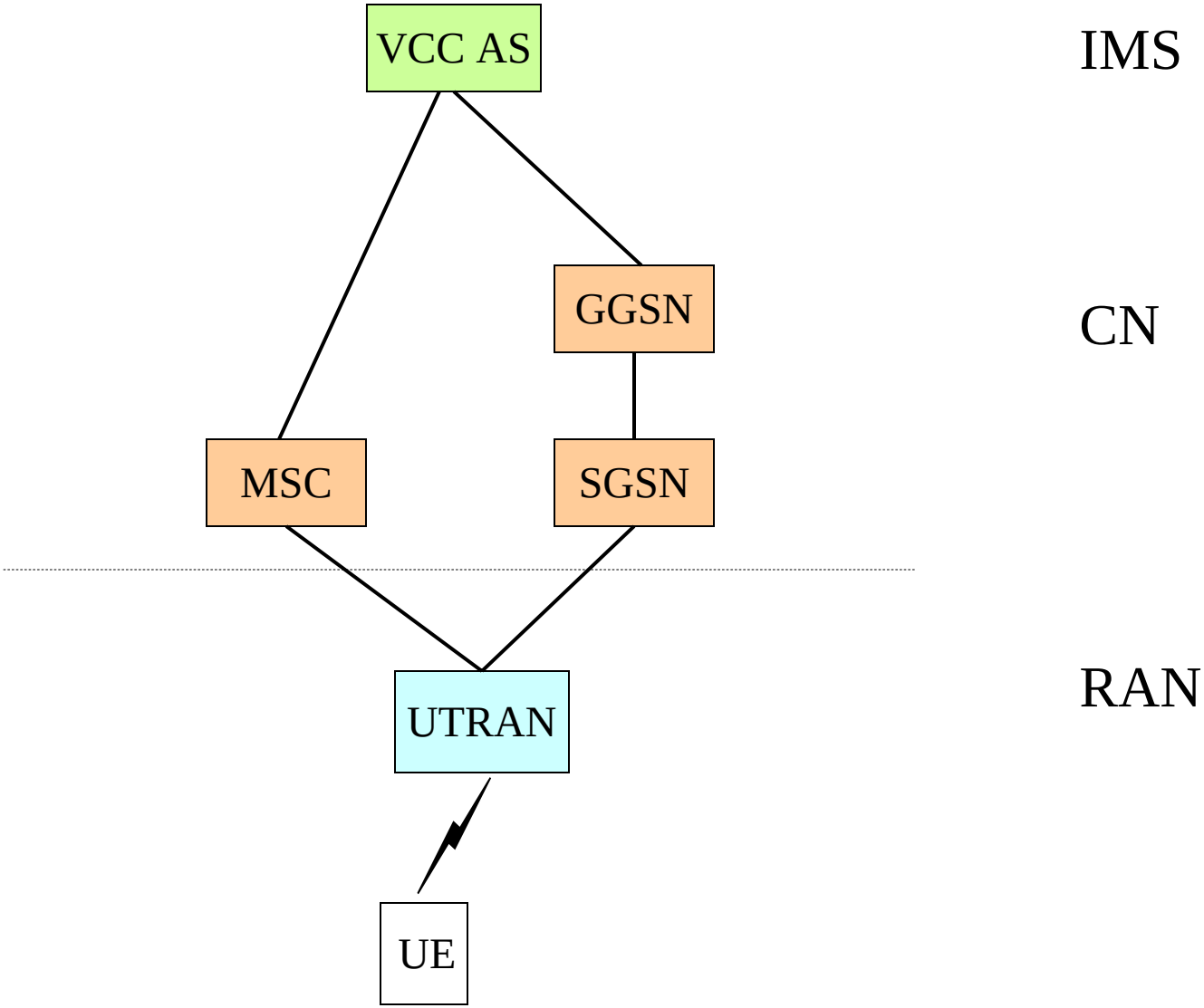

HSPA VoIP → WCDMA CS: Handover

Call Flow

1. UE is in a VoIP call anchored in the VCC AS

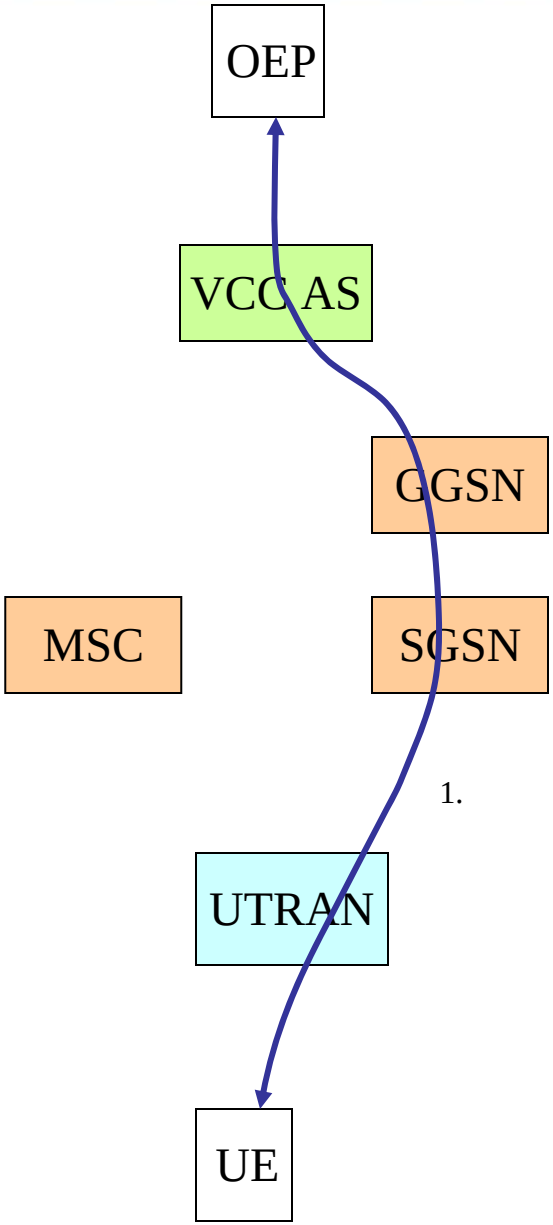

HSPA VoIP → WCDMA CS: Handover

Call Flow

1. UE is in a VoIP call anchored in the VCC AS
2. Based on UE measurement reports, UTRAN realizes that the UE is running out of HSPA VoIP coverage

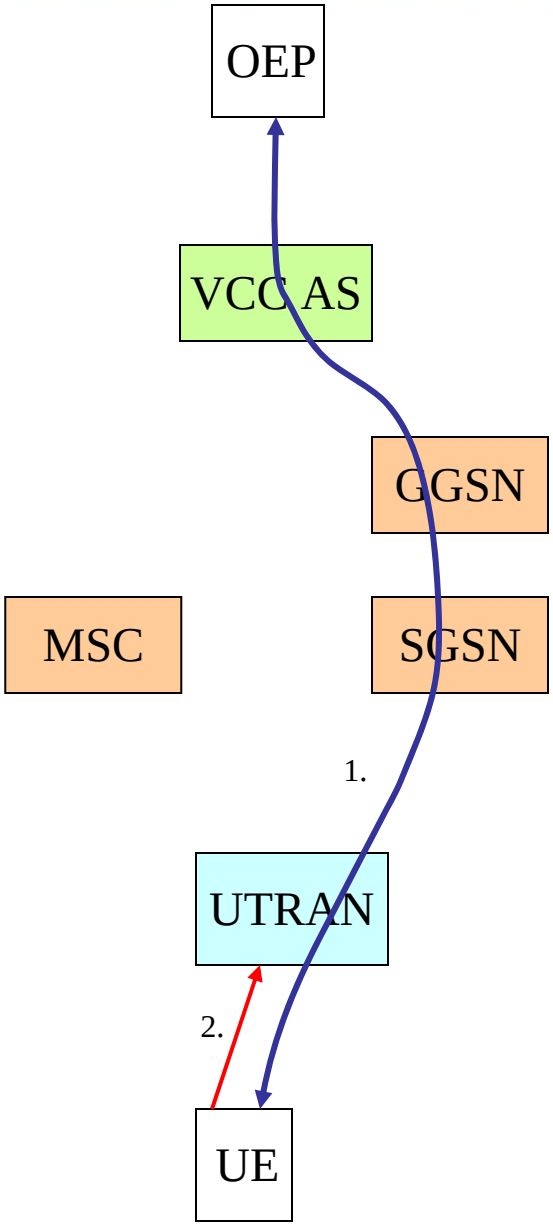

HSPA VoIP → WCDMA CS: Handover

Call Flow

1. UE is in a VoIP call anchored in the VCC AS
2. Based on UE measurement reports, UTRAN realizes that the UE is running out of HSPA VoIP coverage
3. UTRAN sends a "VCC HO Command" to trigger the CS call establishment in the UE

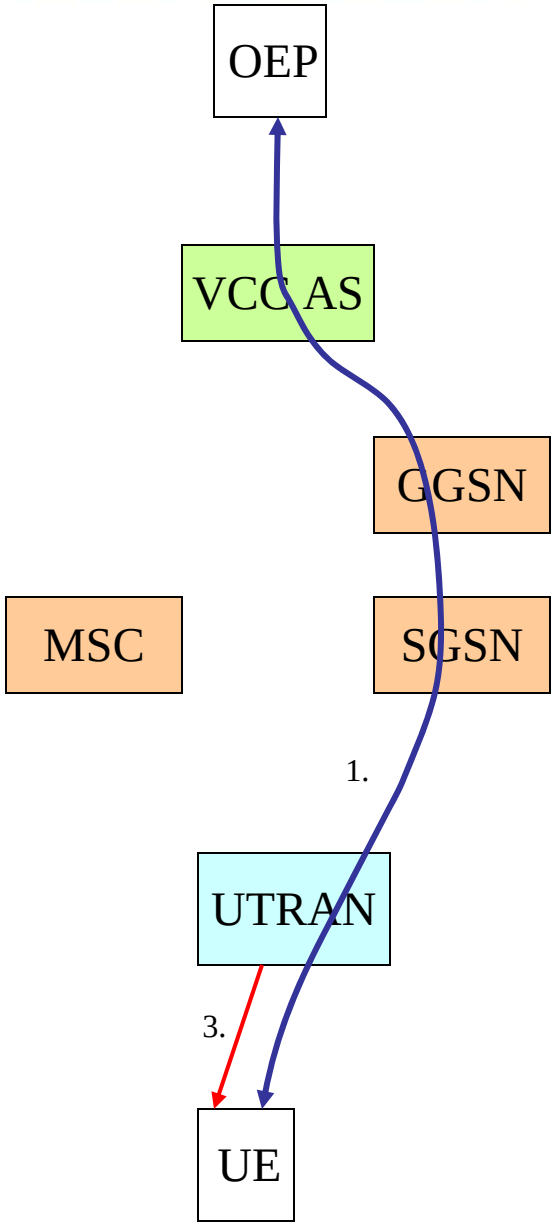

HSPA VoIP → WCDMA CS: Handover

Call Flow

1. UE is in a VoIP call anchored in the VCC AS
2. Based on UE measurement reports, UTRAN realizes that the UE is running out of HSPA VoIP coverage
3. UTRAN sends a "VCC HO Command" to trigger the CS call establishment in the UE
4. UE simultaneously sets up a CS call in the same cell and anchors it at the VCC AS

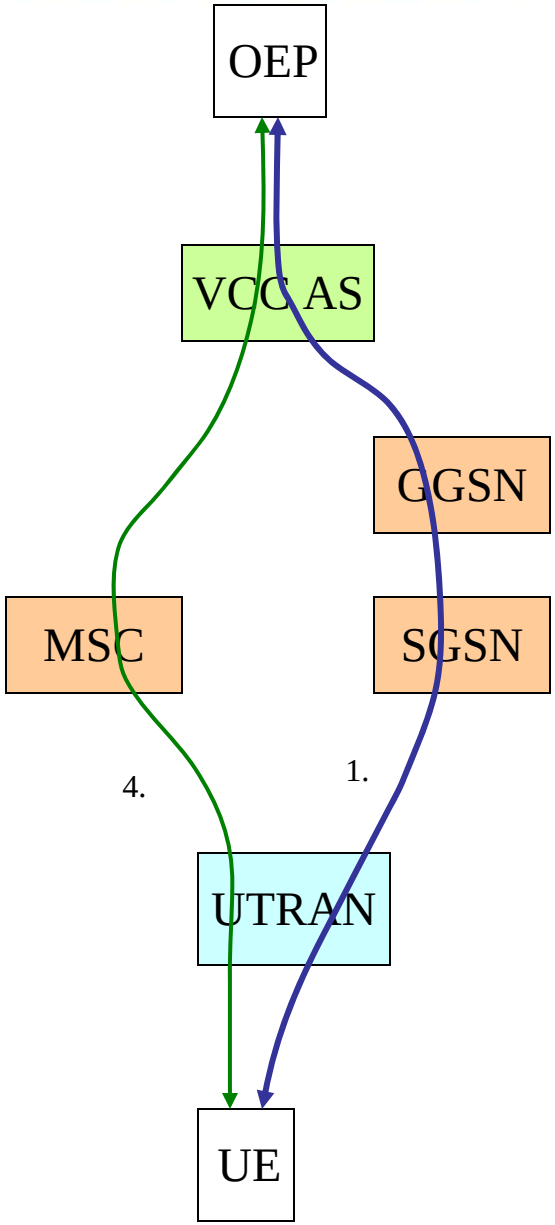

HSPA VoIP → WCDMA CS: Handover

Call Flow

1. UE is in a VoIP call anchored in the VCC AS
2. Based on UE measurement reports, UTRAN realizes that the UE is running out of HSPA VoIP coverage
3. UTRAN sends a "VCC HO Command" to trigger the CS call establishment in the UE
4. UE simultaneously sets up a CS call in the same cell and anchors it at the VCC AS
5. VCC AS switches data path for the voice call and resource are released in the source side. From now on UTRAN can perform a regular handover to a cell that is not VoIP capable

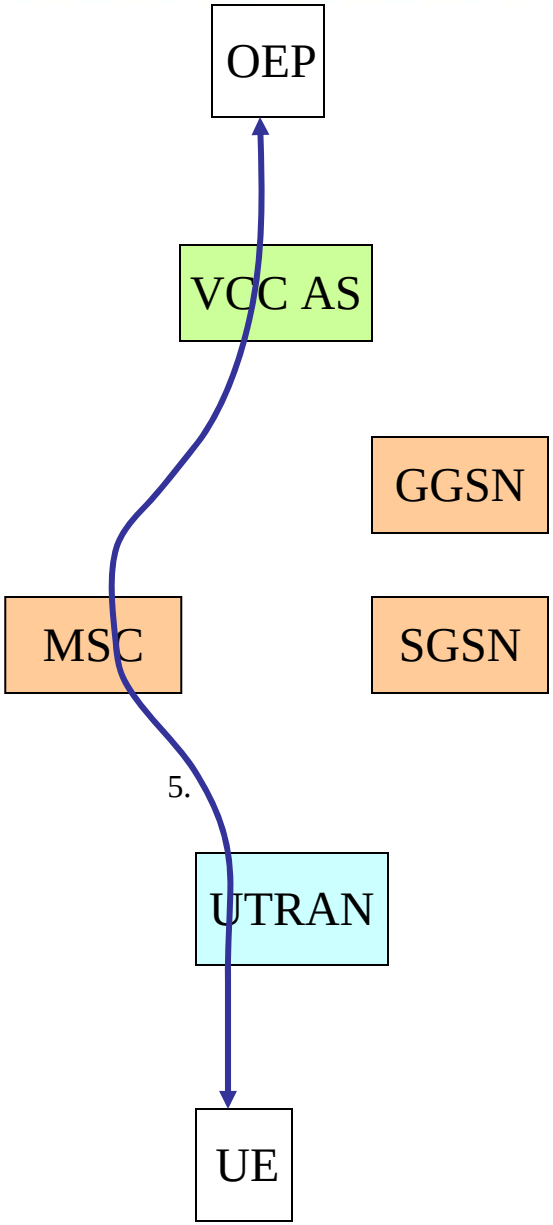

RP-070456

HSPA VoIP → WCDMA CS: Handover (cont'd)

- Principals of this solution
  - Steps 1, 4, 5 are "borrowed" from VCC
    - This means a VCC AS (IMS) is required
      - This is made possible by the fact that the UTRAN standard already allows to establish a CS call while in a PS session in the same radio link
  - Step 2 is an ordinary network-controlled handover mechanism
    - This means the network needs to implement appropriate algorithms and possibly a new event
    - Note that this solution requires to perform the PS → CS domain redirection when the UE is **still** in the HSPA VoIP-capable cell
      - More on this later
  - Step 3 is a new UTRAN-only message
    - Introduction of "VCC HO Command"
      - Addition of IE in an existing RRC message (e.g. paging)

HSPA VoIP → WCDMA CS: Handover (cont'd)

- Assumption
  - UTRAN knows the cell HSPA VoIP-capability

- Example of operation
  - The operator configures a "buffer zone" of cells at the edge of the HSPA VoIP-capable area of coverage
    - Orange in the picture
  - When the UE enters the "buffer zone", UTRAN configures a new measurement event in the UE that is used to trigger the VCC handover

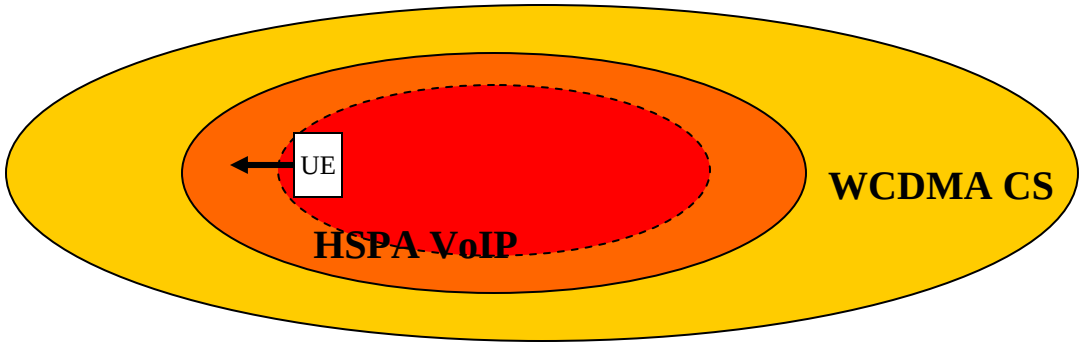

HSPA VoIP → WCDMA CS Service Continuity:

Call Delivery in idle mode

HSPA VoIP → WCDMA CS: Call Delivery

- What is the problem?
  - How does an idle UE knows that it has moved out of an HSPA VoIP-capable area so that it can modify its IMS registration accordingly
    - IMS needs to know in which domain to deliver the paging/call

- What is a possible solution?
  - UTRAN cells to broadcast their HSPA VoIP capability
    - Change to RRC needed
  - UE to modify its IMS registration based on the HSPA VoIP capability of the cells on which is camping on

Conclusions

- The document shows that operators have currently very limited options to ensure service continuity for HSPA VoIP
- A solution is then proposed to enhance service continuity in Rel-7
  - Single Radio solution allowing PS → CS domain redirection
- The solution is an extension of the Rel-7 (Dual Radio) VCC framework primarily developed for 3GPP ←→ WLAN inter-operability: TS 23.206
  - No impact on architecture
    - Exploits the fact that WCDMA allows concurrent PS and CS services
  - Two minor changes to RRC
    - Additional IEs for paging type2 and SIB3
- RAN is asked to discuss the proposed Rel-7 service continuity enhancements