3GPP TSG-RAN WG4 Meeting #81
Reno, Nevada, USA, 14 - 18 November, 2016

R4-1609801

On NR Band structure

www.huawei.com

Source: Huawei, HiSilicon
Agenda: 11.2
Document for : Discussion

HUAWEI TECHNOLOGIES CO., LTD.

Challenges: Huge number of potential new bands for NR

2G/3G Bands

GSM bands

- 800M:
- 900M:
- 1800M:
- 1900M:

Main UMTS bands

- Band I
- Band II
- Band IV
- Band VII

LTE Bands

51 LTE bands (36.101, e10)

- **FDD bands:** B1~B32, B65~B70
  - SDL: B29, B32, B67, B69
- **TDD bands:** B33~ 47

800+ CA/DC band combinations (36.101, e10)

- **Intra-band CA:** 76
- **2 bands CA:** 161
- **3 bands CA:** 100
- **4 bands CA:** 20
- DL CA up to 5CC
- UL CA up to 2CC

Note: Some band combinations are the fall back combination for the upper band combination

Issues of LTE band structure

- UE needs to support more than 20 bands for global roaming, let alone support of CA
  - Only a few UE types to support global market
- Very complicated UE implementation for so many bands and band combinations
- High workload in standards for inter-band CA scenarios
- Longer delay for initial cell search

New challenges facing NR

- More potential bands/band combos to be defined
  - All above issues exist for NR
- Significant coverage difference among different bands, e.g. between low and high frequency bands

Challenges: Global roaming, Coverage and Cost

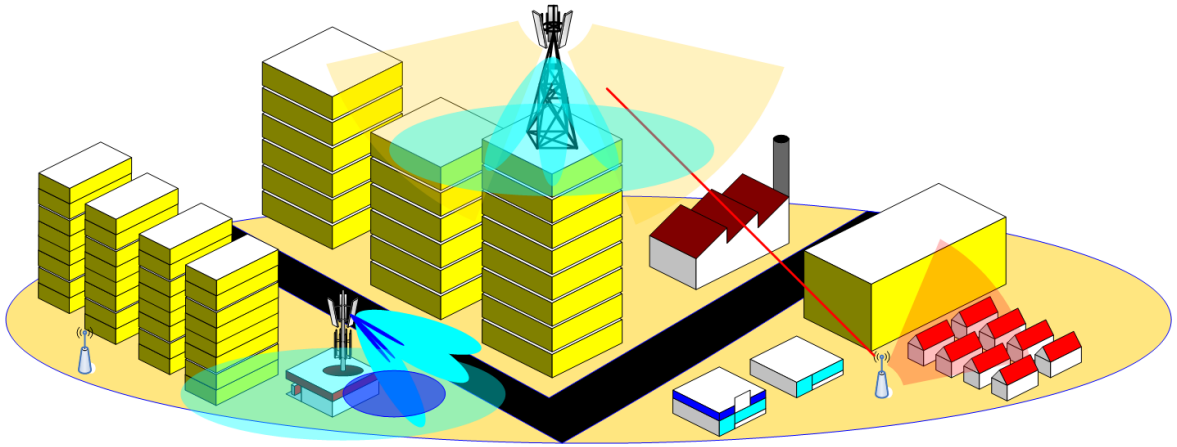

- **Global roaming**
  - How many years does it take to get global roaming UE in Market given that hundreds of bands is defined?
  - How many RF channels can be accommodated in a UE?

- **Coverage and deployment cost**
  - Should we aim to enhance coverage for all the bands?
  - Or, should we differentiate bands and aim to make full use of good propagation conditions of lower bands for mobility and control?

Time to consider new band structure for NR

- **Potential Solution: bands are divided into two categories**
  - **Anchor bands**
    - Full coverage (DL/UL) for complete mobility and Initial access
    - Always on duty
    - Limited number of anchor bands to speed up early NR deployment, simplify UE implementation complexity and maximize global eco-system
  - **Flexible bands**
    - Traffic boosting, considering asymmetric UL/DL traffic load
    - Beam steering (no need of full coverage)
    - Traffic adapted Power ON/OFF to reduce the power consumption
    - Trade off between requirements and implementation challenges

Full utilization of spectrum for NR

- **Separate DL and UL anchor bands for flexible spectrum utilization**
  - **Network planning characteristics**
    - Imbalance of DL/UL coverage
      - If lower band is used for uplink, a better coverage can be achieved considering the difference of link budgets between uplink and downlink
    - Imbalance of DL/UL traffic load
      - It is possible to pair one UL band with multiple DL bands
  - **Full utilization of some TDD band(s) as NR DL anchor band**
    - Pair TDD carrier(s) with the UL carrier in some other band with good propagation condition
    - Enable full utilization of underutilized TDD band(s) for downlink transmission

Full utilization of spectrum for NR

- **Separate DL and UL anchor bands for flexible spectrum utilization**
  - **Some SDL band(s) to serve as NR DL anchor band:**
    - Benefits of SDL band:
      - ~ Good coverage: Sub-6GHz SDL bands have good propagation condition
      - ~ Wide bandwidth available for some SDL bands
    - Potential usage:
      - ~ Pair the SDL with the UL carrier(s) in some other band
      - ~ Use SDL band as downlink anchor and the other band uplink part as uplink anchor.

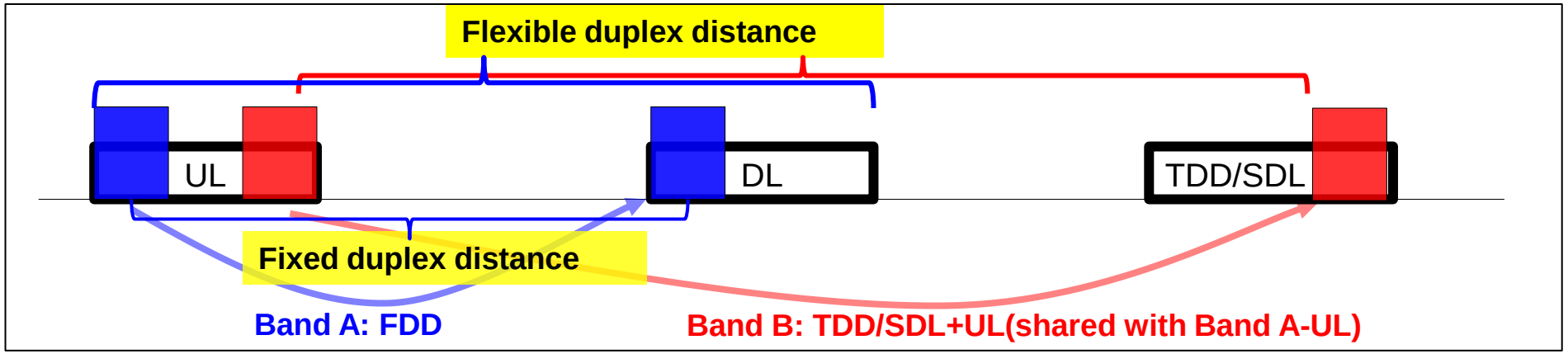

Summary

- **Motivation to trigger discussion on NR band structure**
  - Make best use of advantages of the wider range of spectrum resources to boost user experience at low cost of network deployment
  - Reduce UE implementation complexity to support multiple bands
  - Reduce the standardization complexity caused by the increasing number of bands
- **Proposal**
  - NR band structure needs be discussed in RAN4 in order to meet the above goals
  - It is proposed to consider the following solutions
    - **Anchor band and flexible band**
      - ~ Introduce anchor band optimized for global roaming and mobility
      - ~ Introduce flexible bands targeting at data transmission boosting
    - **Separate DL and UL anchor bands**
      - ~ Pair TDD/SDL band(s) as DL with one UL band (as UL anchor)
      - ~ Support flexible duplex distance

Thank You

www.huawei.com

Copyright©2016 Huawei Technologies Co., Ltd. All Rights Reserved.

The information in this document may contain predictive statements including, without limitation, statements regarding the future financial and operating results, future product portfolio, new technology, etc. There are a number of factors that could cause actual results and developments to differ materially from those expressed or implied in the predictive statements. Therefore, such information is provided for reference purpose only and constitutes neither an offer nor an acceptance. Huawei may change the information at any time without notice.